23rd World Gas Conference, Amsterdam 2006

Evolution of an LNG Terminal: Senboku Terminal of Osaka Gas

Main author

Toshiro Otsuka

Japan

TABLE OF CONTENTS

ABSTRACT

Osaka Gas supplies natural gas based on LNG to its customers in the Kansai region located in the mid-western part of Japan. The number of its gas consumers in the service territory amounts to some 6.6 million with its total annual gas sales volume of approximately 8.0 billion cubic meters (45 MJ/m^3). The company also supplies natural gas to power generation plants and it is engaged in the utilization of LNG cold for various businesses. Furthermore, the company is actively expanding its electric power generation business in response to the deregulation of the energy sector.

The Osaka Gas Senboku LNG Terminal is an important energy supply base in the Kansai region, producing approximately 70% of the total natural gas supplied by the company. The Senboku LNG Terminal consists of two plants: Senboku 1 and Senboku 2. The Senboku LNG Terminal has maintained an efficient operation for more than thirty years as the main LNG receiving terminal and the natural gas supply center of Osaka Gas. Since the start of its operation, Senboku has been operated under the company's principle of ensuring higher security and stable operation of the terminal, and to realize economical supply of natural gas. In order to meet the increased demand for natural gas, Osaka Gas has expanded the terminal and added new equipment since the first introduction of LNG in 1972. Osaka Gas has continued maintenance, education, training, development of units, and other activities to fulfill the missions of the LNG terminal.

There is a growing demand for natural gas as a clean energy source. In order to make the most of the terminal infrastructure, and to meet people's higher expectations on natural gas, the terminal has a greater role to play as an energy supply center in the future.

Acting in accordance with its basic principles, the terminal plays an important role as a base for supplying natural gas. By expansion of its role into power generation and cryogenic business, Osaka Gas intends to transform the terminal into a multi-energy base that satisfies a variety of needs.
The paper reports the company's activities in the business expansion at Senboku LNG Terminal as well as those related to maintenance and upgrading of services of the LNG infrastructure.

Figure 1 Senboku LNG Terminal

PAPER

1. Power generation business

Under the deregulated market environment where customers require an economical supply of multiple energy sources, Osaka Gas has entered into electricity generation and supply business.

In addition to the small generator sets installed at Senboku 1 and the Himeji Terminal, Osaka Gas plans to build a large power plant of 1,100 MW (270 MW x 4 units) in the Senboku LNG Terminal. It is planned that, by making the most of the infrastructure of the Senboku LNG Terminal for reducing construction costs, the company will supply inexpensive electricity and make more effective use of the Senboku LNG Terminal. Table 1 shows the list of the power generating plants of Osaka Gas.

Table 1 Power generating plants of Osaka Gas

Site	Power generation method	Output	Start of operation
Senboku 1 (see Figure 2)	gas turbine combined cycle	18MW (9 MW x 2units)	July 2002
Himeji Terminal	gas turbine combined cycle	50 MW	June 2004
Senboku 1 & 2	gas turbine combined cycle	1,100 MW (270 MW x 4 units)	November 2009

Figure 2 Power generation plant at Senboku 1

2. Cryogenic energy business

Osaka Gas has used cryogenic energy of LNG extensively for air separation, power generation, and other applications. Because the Senboku LNG Terminal is located in an industrial complex, we intend to facilitate the effective use of energy and reduce the cost of gas by sharing the utilities with neighboring companies, and by further promoting the use of LNG cold. Table 2 shows the history of their practical applications.

Table 2　History of LNG Cold Use at Senboku LNG Terminal

‘70s	‘77 : Air Separation (Cold Air Products #1)
	‘79 : Cryogenic Power Generation (Propane Rankine Cycle)
‘80s	’80 : Carbon Dioxide Liquefaction
	‘82 : Cryogenic Power Generation (Propane Rankine+Direct Expansion)
	‘83 : Air Separation (Cold Air Products #2)
	‘87 : Cold Source for the Chemical Industry
‘90s	‘93 : Air Separation (Cryo Air)
	‘97 : Boil Off Gas Liquefaction
‘00s	‘04 : Cascade LNG Cold Energy in an Industrial Complex

2.1 A Traditional Cold Energy Application

2.1.1 Cryogenic power generator

Electric power is generated through a Rankine expansion turbine cycle, which is integrated into the LNG vaporization process (see Figure 3).　The process employs Tri-Ex Vaporizers, which, by using an intermediate fluid, are applicable to cold seawater and can utilize the cryogenic energy of LNG.

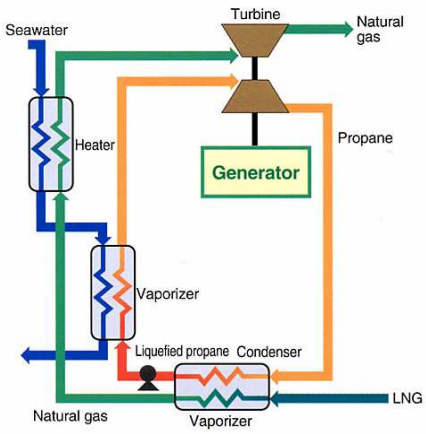

Figure 3　Cryogenic power generation

2.1.2 Air separation

Two air separation plants utilizing LNG cold energy are owned and operated by Osaka Gas’ subsidiaries, Cold Air Products Co., Ltd. and Cryo Air Co., Ltd. (see Figure 4). Compared with conventional processes using electrical power as the sole energy source, Osaka Gas’ LNG cryogenic plants achieve substantial cost saving.

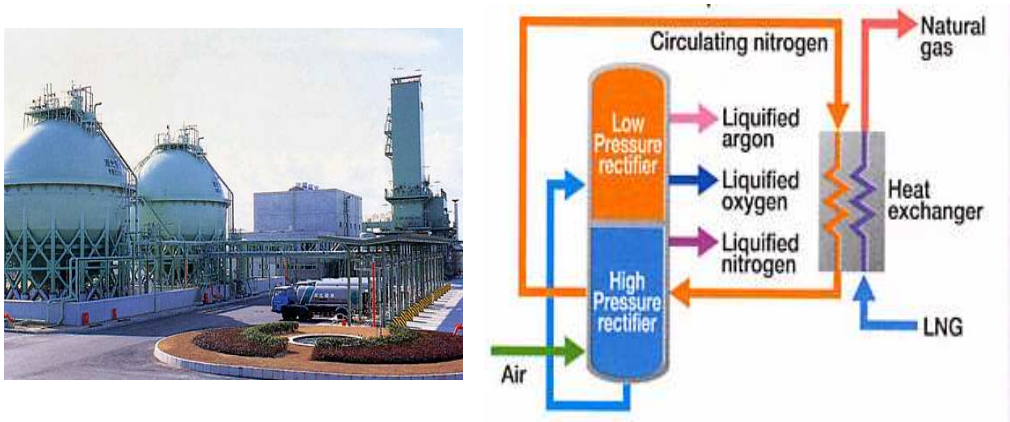

Figure 4　Air iquefaction

2.1.3 Boil-off gas liquefaction

An LNG cold utilization system to liquefy boil-off gas (BOG) saves 30 to 60% of electrical power required to send out BOG in comparison with a conventional high-pressure compression system. New cold energy storage technology is adopted in this system for continuous and stable BOG liquefaction throughout the day regardless of the fluctuation of LNG flow volume (see Figure 5).

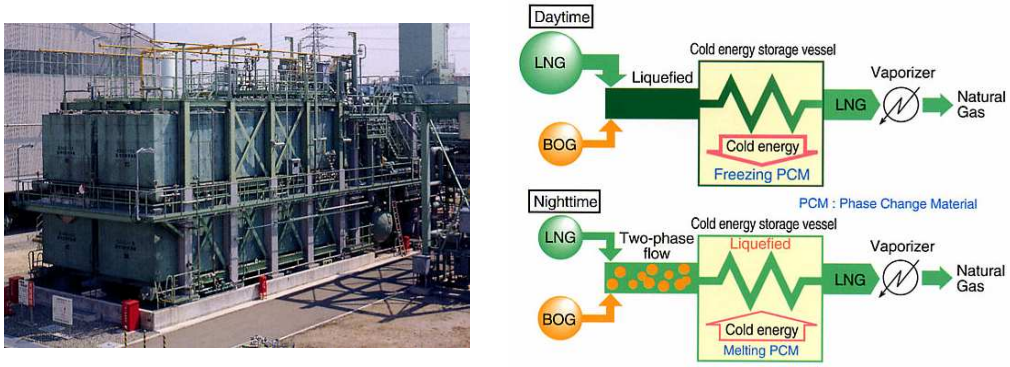

Figure 5　Boil-off gas liquefaction system

2.2 A New Cold Energy Application in an Industrial Complex

2.2.1 LNG cryogenic energy cascade process

An oil refinery and a petrochemical plant and Senboku LNG Terminal located in the adjacent areas of the Sakai-Senboku Coastal Industrial Complex have worked in close cooperation to develop technologies to effectively utilize the cold energy of by-product gas and LNG.

What Osaka Gas has been working to develop here is an “LNG cryogenic energy cascade process” that is able to exchange heat between heat sources and the LNG cold energy source in stages from cryogenic temperatures all the way through to ordinary temperatures, which will be capable of supplying cryogenic energy to four or more different types of plants within the same industrial complex. This is one of the few efforts that has been made anywhere in the world to utilize LNG cryogenic energy at multiple plant sites.

The overall flow of the process is illustrated in Figure 6. Compared with non-cascade systems, this newly developed LNG cascade process is far more efficient, requiring only 77% as much LNG to produce the same amount of cryogenic energy.

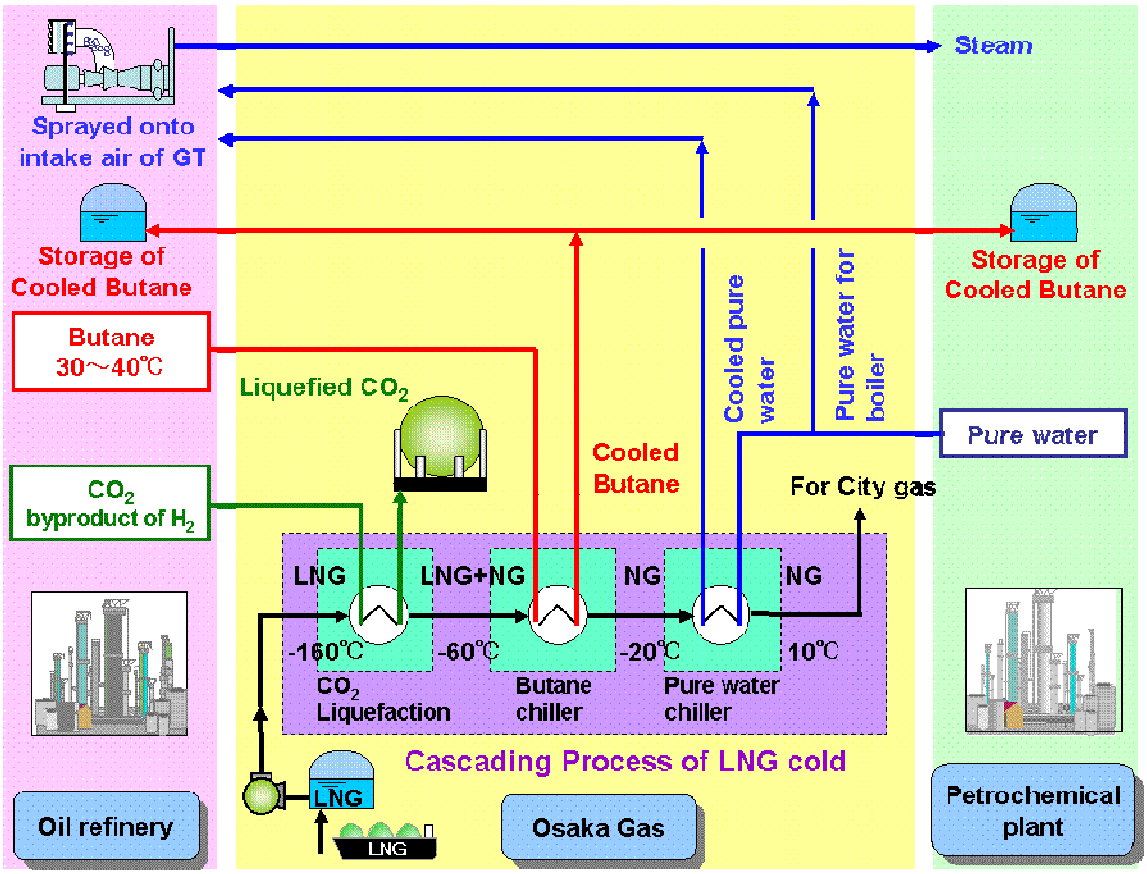

Figure 6 LNG cryogenic energy cascade process

2.2.2 Carbon dioxide liquefaction process

There are two methods of liquefying carbon dioxide. First is the traditional process which uses adsorption refrigerating machines to cool the raw carbon dioxide gas. Because these machines are generally only capable of cooling the gas to about -30 degrees C, it is necessary to also apply a pressure of about 2 Mpa(g) in order to achieve condensation. Second is the “LNG cryogenic liquefaction process” that uses LNG cryogenic energy to cool the carbon dioxide by means of heat

exchange between the gas and the LNG cold energy using an intermediary cooling agent. This process is capable of liquefying carbon dioxide using only about half as much electricity as the traditional process, so it is highly superior in terms of energy conservation. Osaka Gas has recently upgraded this technology, using a direct heat exchange method between the carbon dioxide gas and LNG to pre-cool the carbon dioxide. This new process has achieved a further 10% reduction in the amount of electricity required for pressurization. This plant started commercial operation in July 2004.

2.2.3 Butane cooling process

In the past, freezing machines, etc. were used to cool the butane produced at oil refineries for low-temperature storage. In contrast, Osaka Gas' new process using LNG cryogenic energy at the temperature range between -60 degrees C and -20 ℃ to cool this butane conserves a great deal of energy because it requires only a small fraction of the electricity required in the former cooling process. In this new process Osaka Gas receives ordinary temperature butane from the neighboring oil refinery, cools it by using LNG cryogenic energy, and then returns low temperature butane to the same oil refinery or the nearby petrochemical plant. Osaka Gas started construction work of the butane cooling plant in September 2004.

2.2.4 Water spray systems for cooling intake air for gas turbines

The power output of gas turbines declines in the summer because the intake air density decreases as the intake air temperature increases. There are several technologies available to cool intake air in order to prevent such declines in power output. One such air cooling technology involves the use of water spray systems that use re-circulated compressed air.

Osaka Gas is now developing a new intake air cooling technology that uses -20 degrees C~-10 degrees C LNG cryogenic energy to cool ambient temperature pure water that is then directly sprayed on the air intake part of the gas turbine. This process is able to increase turbine power output by more than 6%. Under this new scheme, pure boiler-use water at ordinary temperature is received from the petrochemical plant. Some of this water is cooled and is then used to cool the intake air of gas turbines at oil refineries. The surplus steam associated with the increase in power output achieved as a result of cooling the intake air is then transferred for effective use in the petrochemical plant. Commercial operation of water spray systems for cooling intake air for gas turbines started in 2005.

3. Policies to support business development and fulfill the company's basic principles

In order to adapt ourselves to the changing business environment, including aging equipment, intensifying market competition, and an increase in number of large LNG carriers, and to support future transformation of the terminal into a multi-energy supply base, we have developed the following policies.

3.1 Equipment Policy

Osaka Gas intends to maintain the reliability of old equipment that has been operated for 30 years. Following the recent discovery of problems and the development of failure physics, Osaka Gas has identified all degradation modes in each part of the equipment, studied an appropriate solution to the degradation problem, and implemented a solution, thereby reducing potential operational risks.

As Osaka Gas carries out the large-scale repair of power receiving equipment, substations, and computer systems, the scope of repair is determined by lifetime evaluation based on appropriate inspection.

3.1.1 Maintenance of mechanical equipment

The mechanical equipment at the terminal has maintained a healthy condition through daily inspection and periodical maintenance. However, the occurrence of tangible degradation increases 30 years after the start of operation. To deal with the problem, we have implemented measures to restrain degradation speed of the equipment at Senboku LNG terminal and to estimate the durable years correctly. An example is shown below.

Restraining corrosion progress of the support part of the normal temperature piping

We restrain corrosion progress by adding the anti-corrosion building and covered by stainless steel.

Fatigue evaluation of the LNG inner-tank

We evaluated it by using T-joint fatigue test which modeled the lower part inner-tank of in the early stages.

Degradation evaluation of the LNG piping urethane support

We evaluated the compressive strength in order to confirm the influence of the breakage of the urethane block and the material degradation by the hydrolysis. The present situation is the following of limit length.

3.1.2 Maintenance of the electricity and instrumentation facilities

The electric and the instrumentation facilities need to be updated in the period between 15 and 20 years for the following reasons:

Application limits of the parts

Parts supply termination

Expiration of the maintenance contract

The update case of the operational control system is shown below.

Table 3　The update case of the operational control system

Site	Installation	The 1st update	The 2nd update
Senboku 1	1971	1987	2002
North area of Senboku 2	1976	1994	2006
South area of Senboku 2	1988	2007	

3.2 Policy on human resources development

Osaka Gas implements education and training for operators in order to develop technical skills required to a variety of operational equipment such as power generation equipment, cryogenic facilities in addition to LNG handling facilities.　For this purpose, various simulation activities become necessary in addition to experiencing technical and operational skills on the job.　We have made available various training program to deal with a wide range of contingencies.　For the specific extracted contingencies, we have implemented measures both in operation of the equipment and in the hardware itself.

Among those cases and specifically for the influential ones, we conduct practical drills and training for operators to take actions quickly to address those problems.　In these training sessions and drills, no advance contingency information is given to the operators so that the trainees can take actions in simulated circumstances.

Also, we have developed the simulator equipment which can reproduce the dynamics of the operational process with high precision.　By using the simulator, we can train operators under contingency situation that are difficult to experience in normal operations (see Figure 7).

On the operation of power generation equipment, we have limited know-how in dealing with contingencies because of the short history of operation.　To address this issue, a manual has been developed by putting together major causes and actions and it has been distributed to operators for their use.

Figure 7　Simulator equipment

4. Development

Osaka Gas has developed inexpensive, safe, and efficient equipment. Currently we are building a low cost LNG underwater pipeline to connect Senboku 1 and Senboku 2 using the newly developed invariable alloy (“Invar”) piping technology. Completion of this pipeline will ensure the continuous operation of Senboku 1, which has been built exclusively for to receive middle-size liquefied natural gas carriers. When completed, it will facilitate increasing operational availability of the two terminals (see Figure 8).

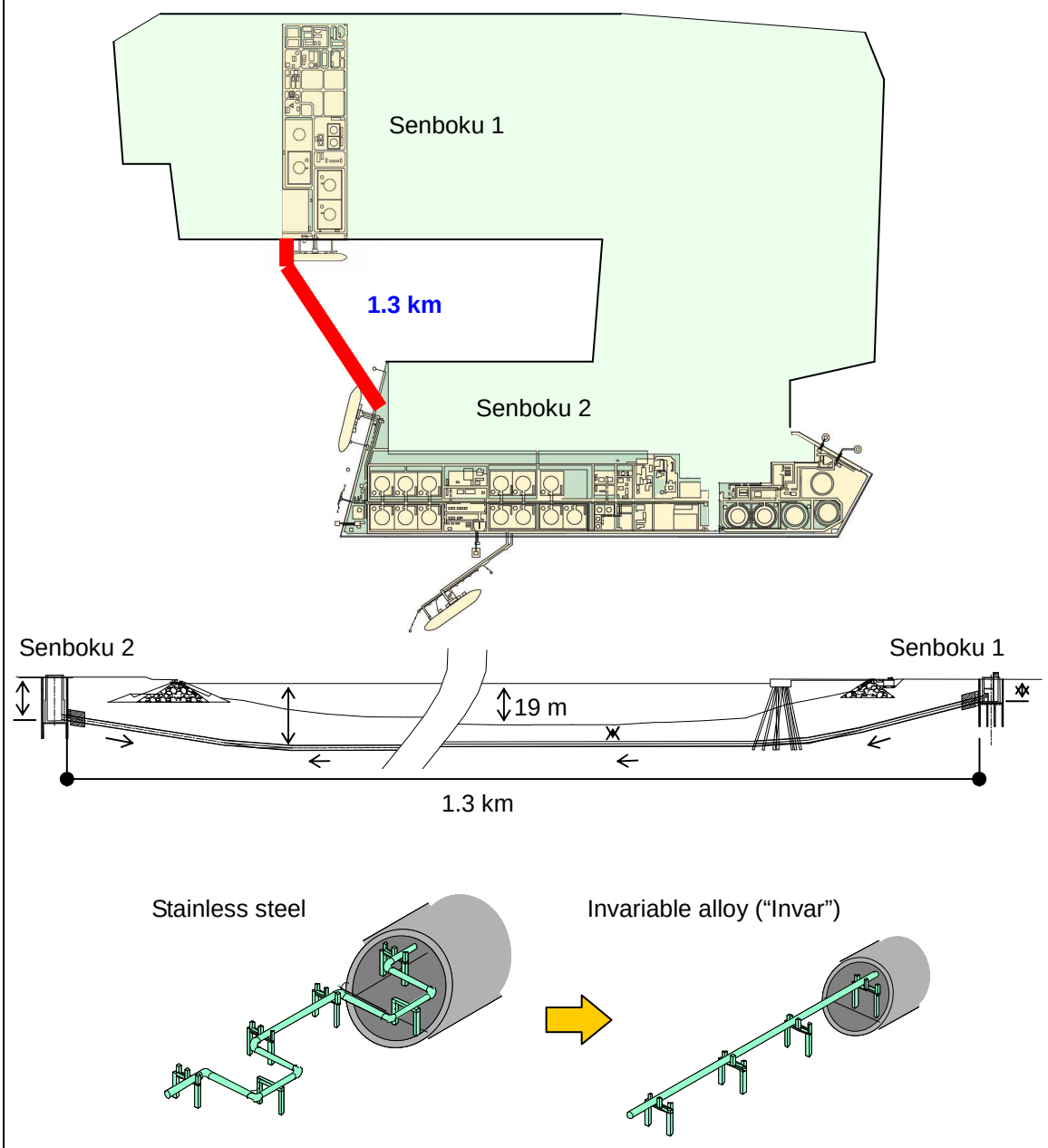

Figure 8 LNG underwater pipeline from Senboku 1 to Senboku 2

5. Conclusion

The Senboku LNG Terminal has functioned for many years as a reliable foundation for the company's natural gas supply. At present, it has an LNG storage capacity of 1,765,000 m3 and an LNG vaporization capacity of 1,800 t/h. We have developed at the Senboku LNG Terminal a variety of LNG-cold utilization businesses including production of liquefied nitrogen, liquefied oxygen, liquefied argon, and liquefied carbon dioxide; cryogenic crushing; and supply of cryogenic energy and cold water to the neighboring businesses. In 2009, the Senboku LNG Terminal will also operate a power plant of 1,100 MW.

In the course of its history, the Senboku LNG Terminal has evolved into a multi-energy base for natural gas, electricity, and LNG cold. Completion of a large power plant will mark the beginning of a new phase. We will support the development of businesses by adapting ourselves to changing business environment, following the policies, and observing the basic principles of ensuring security, stable operation, and economical supply of energy products.

LIST TABLES

LIST OF FIGURES