A NEW BUSINESS APPROACH TO CONVENTIONAL SMALL SCALE LNG

Paper Nº 599.00.

presented at the
IGU 24th World Gas Conference
(Argentina 2009)

by

Enrique Dameno Garcia-Cuerva
Director Business Development and Technology
Repsol-Gas Natural LNG (STREAM)
ejdameno@streamrgn.com

Federico Sanz Sobrino
Project Manager
Repsol-Gas Natural LNG (STREAM)
fsanzs@streamrgn.com

Keywords: LNG, small-scale liquefaction, local gas development, LNG export

CONTENT

1. INTRODUCTION

There are a great number of natural gas reservoirs in the world which have not been exploited, whether for their small size and/or their long distance to consumer points. Approximately 1,400 fields are estimated to have between **0.25 and 5 Tera cubic feet (Tcf)** of natural gas, a quantity that does not permit its exploitation with a standard conventional approach. Moreover, in most cases a gas market on a local level does not exist, nor is there sufficient potential demand to justify this resource for local use.

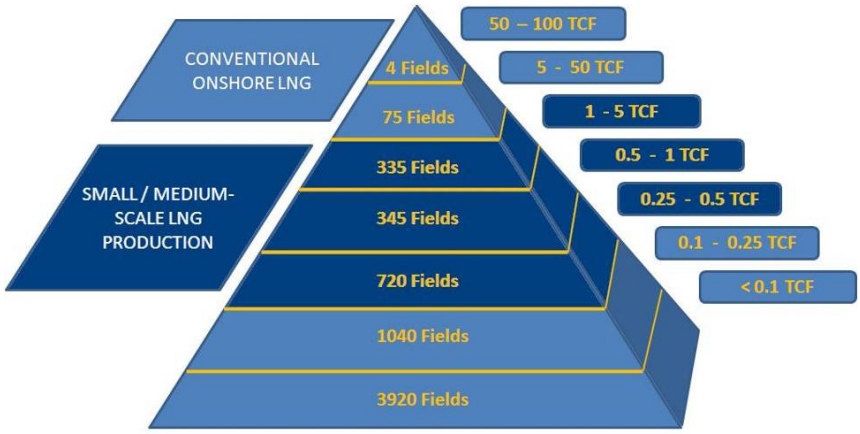

Normally these reserves are not contemplated for conventional Liquefied Natural Gas (LNG) export development and only on certain occasions small/medium scale LNG projects have been considered.

When a destination market is far away from an energy source, such as a gas field, **it is necessary to transport that energy**. Nowadays there are **several technologies available** to do this transportation; it is necessary to analyze its use and application in every different case:

- Pipeline transportation.
- *In situ* **power generation** and high-voltage electricity transportation.
- **Gas liquefaction and LNG transportation** in LNG Carriers / LNG tanker trucks / LNG tank wagons (railroad).
- Manufacture of liquid fuels by **GTL** (*Gas To Liquids*) **technology.**
- **Compression to high pressure and transportation** in high pressure vessels as CNG (Compressed Natural Gas).

The difficulty to access to new natural gas reservoirs and new LNG supplies as well as the increasing development of new technologies for the production of small scale LNG brings the exploitation of small reservoirs to a **new situation** in which actual oil and gas prices scenarios might have an important role in the new LNG supplies in the medium term.

This paper addresses the issues and potentiality of small scale LNG's ability to enhance the monetization of small/medium stranded gas reserves. It carries out a preliminary analysis of the business model of a small scale liquefaction project where the traditional scheme of LNG export to international markets coexist with a local LNG distribution operations that helps the development in the host country using LNG tank trucks and satellite regasification facilities.

The paper also reviews state-of-the-art small scale LNG technologies (liquefaction, transportation and regasification), and summarizes the current development of projects around the world.

The document includes an analysis and discussion of the fundamental concepts for the success of the proposed business case: energy prices, regulation, market development, business schemes and project management.

2. CONCEPTUAL MODEL

2.1 General Description

The solution studied could permit the profitable exploitation of small to medium reserves of natural gas (between **1 and 1.5 Tcf) through an on-shore small-scale LNG liquefaction plant** of 1 million tons per annum (mtpa) of LNG production (equivalent to approximately 180,000 m³ LNG per month) with a double destination:

A) Part of the LNG would be addressed to **exportation**, using a conventional maritime transport scheme to the target market.
B) The rest of the LNG would be used to develop a **domestic natural gas market**.

The local energy market would typically respond to the following characteristics:

- **Non existing gas market.**
- Low energy development: reduced rural electrification rate, important electricity potential demand, electricity generation deficit, **insufficient coverage of electric transport grid, etc.**
- High dependence on imported fuels (fuel oil, diesel oil, liquid petroleum gas (LPG)), historically with a superior energy cost per unit than LNG.

The proposed model contemplates therefore three aspects which are described:

- Production of LNG.
- Exportation of part of the LNG.
- **The transportation and marketing of the rest of the LNG in the local market.**

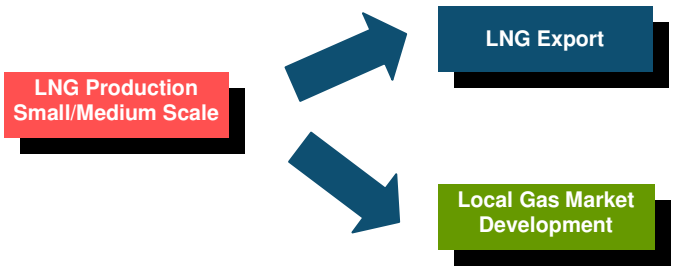

The sustainability of the business model is leveraged by the exportation scheme.

In the economic model, LNG sale prices are referred to Brent for simplification purposes. The price of local gas is estimated on the basis of a competitive substitution to an alternative liquid fuel.

The present study, although it **is inspired in** the situation of some Southern African countries, **does not identify a concrete location** for the liquefaction terminal. Consequently it considers generic hypothesis. The **identification and analysis of specific locations** (i.e. producing country) **is an activity to be incorporated in a further feasibility project**.

In the economic model, **gas purchase formulas, gas sales formulas and LNG sales have been modeled based in crude oil Brent**; this allows analyzing the sensibility of the results to the variation of this index.

The economic model also permits the analysis of the **economic impact** with the **CAPEX variations** of the liquefaction plant.

2.2 Upstream

The proposed model considers an upstream scenario in the producing country with the following characteristics:

- **Small quantities of proved gas reservoirs** (between 1 and 1.5 Tcf, equivalent approximately to 28 and 42 bcm). Potential exploration prospects (E&P, for eventual future expansions of the project).
- Stranded gas **not produced due to economic issues**. Not feasible monetization because of the **lack of local market**, impossibility of utilization for power generation due to **inexistence of electricity transport grid**, etc.
- The existence of a **National Oil Company with a relatively low technical level** of development of little experience in project developments.
- Minimum Oil & Gas **regulation** to allow the purchase, processing and export of hydrocarbons.
- Proximity between the **gas production area and a port** to export the LNG.

It is assumed that the required natural gas is produced in a nearby field and transported by pipeline to the liquefaction plant. The entry point of the gas in the liquefaction plant is the battery limit of the project.

Although in subsequent sections the elements and systems that compose the liquefaction plant will be described in detail, it is considered convenient to put forward a global vision of the project.

Natural gas liquefaction is achieved by **cooling** the gas (which main element is methane) until it is converted into liquid (average temperature: -160ºC). In order to achieve this low temperature the **gas transfers heat to a refrigerant fluid that has been previously chilled in a cooling cycle.** So that this fluid "steals" the heat from natural gas until it is liquid.

Previously to the liquefaction, the feed gas must *suffer* some **treatments**, such us:

- Filtration and solids removal
- Liquids separation
- Removal of acid gases dissolved in water and carried in the natural gas stream (such as CO2, H2S, etc)
- Dehydration
- Mercury removal

After the **liquefaction process** the LNG obtained is put into a **cryogenic storage tank**. This storage tank, in which LNG is at atmospheric pressure and temperature -165ºC (approximately), allows a **continuous production** in the liquefaction plant with a **discreet expedition** of the produced LNG.

A **dedicated berthing point** must be built to load the LNG Carriers, with the necessary berthing and mooring infrastructure for this kind of carriers and with the required infrastructure to manipulate the load (basically transportation pipes and cryogenic loading arms)

LNG tanker trucks remove the product from a **LNG tanker trucks loading facility**, which will be provided with the necessary infrastructure: loading arms, loading controlled by weight-bridge, etc.

2.3 Downstream

The proposed model considers a downstream scenario in the producing country with the following characteristics:

- **Non existing gas market**.
- Low energy development: reduced rural electrification rate, important electricity potential demand, **electricity generation deficit, insufficient coverage of electric transport grid, etc.**

- High dependence on **imported fuels** (fuel oil, diesel oil, liquid petroleum gas (LPG).
- **Insufficient regulation** for the marketing of national fuels.
- **Potential gas demand** in small industrial areas (hotels, etc.) located at medium distance to the liquefaction plant.

- **LNG Exports**

As there is no local market for natural gas, most of the LNG produced (base case **80%, 145,000 m^3/ month**) is used for export markets.

It is assumed that the **distance to the export destination market is 5,000 nautical miles** through Suez Canal. Optimized round trip takes **29 days.**

The economic model considers maritime transport with a standard LNG carrier of **138,000 m^3.**

- **LNG Local Distribution**

Something new in this approach is that it includes a local development of the natural gas market through LNG.

The alternative for LNG would be **pipeline gas transportation**, which **has not been considered** in this case because of the following reasons:

- **Relative distance** between the potential consumption points to the liquefaction plant. The model considers distances between 400 and 600 kilometres.
- **The small size of the reservoirs.** This means a limited development time (in this study, 25 years) which makes difficult to recover investments from infrastructures such as pipelines.
- **Construction impact.** The construction of pipelines in virgin areas could arise environmental and security problems.
- **Potential demand is not centralized.**

The distribution of LNG to the local market could be done in different ways:

1. Transportation by **LNG tanker trucks**.
2. Transportation by **LNG Carriers**.
3. Transportation by **railroad** (tank wagons).

The **first option is the one chosen** for the case study. LNG tanker trucks transportation is a very **well known technology and it has been used extensively**. It allows an early distribution of natural gas in areas which are not connected to the gas transportation grid. Normally this is a provisional option which would be abandoned once the gas transportation grid is developed, but this does not always happen. There are several regions in the world fed by LNG that have no pipeline construction projects in the medium term.

LNG tanker trucks destination are **several LNG satellite plants**. In those plants the LNG is stored and regasified in order to be injected to a distribution net or destined to a final industrial consumer.

Satellite plants have the following **basic systems**:

- Unloading Unit (for LNG tanker trucks)
- Storage
- Regasification
- Measurement and send out

It is supposed that there is **no local natural gas consumption,** so it will be necessary to give an incentive to natural gas consumption through a **discount with regards to diesel oil prices**, fuel that is meant to be **substituted** in local industries or **new small scale power plants** (with alternative internal combustion engines).

2.4 Business Model

The proposed business model **divides** the LNG production between an **export market and a local market**. This means a **new approach and differs** from other projects by including a local market development with part of the LNG, so that it will contribute with the sustainable growth of the producing country by using its own resources.

In the studied case, it is considered that **80% of the** LNG is destined to the **export market**, while the remaining **20%** is addressed to the **local market**.

The proposed business model has the following structure:

- **Upstream**

  Natural gas is produced by the National oil Company (NOC) or by a combination of a small NOC and a International Oil Company (IOC) through a **Production Sharing Agreement** (PSA) for the exploration and production of the gas field. The NOC/IOC provides the feed gas at the entry point of the liquefaction plant.

- **Midstream**

  The new business approach to conventional small scale LNG is focused in the *midstream*. Within the *midstream* activities, **four different businesses** are considered:

a) Commercial business (Marketing Company)
b) Liquefaction business (Liquefaction Terminal Company)
c) LNG Export business (LNG Export Company)
d) LNG Local distribution business (Local distribution Company)

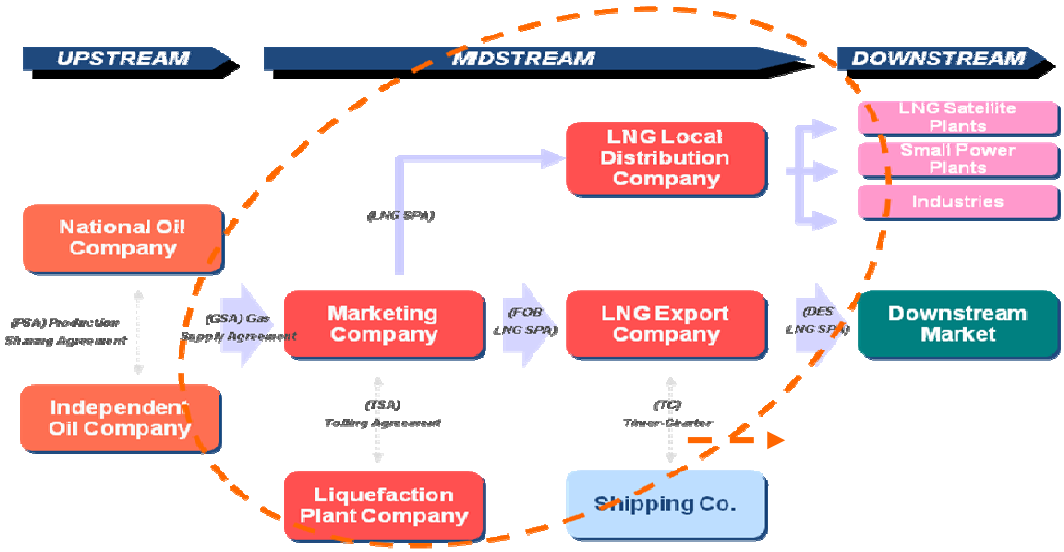

- **Marketing Company**

  This company:

  - **Purchases the feed gas** to the Upstream consortium (e.g. a Joint Venture between the National Oil Company and an International Oil Company) through a **Gas Supply Agreement (GSA)**
  - **Arranges the liquefaction services** to the Liquefaction Terminal Company through a **Tolling Agreement**
  - **Sells** part of the LNG production to the LNG Export Company through a **FOB LNG SPA**
  - **Sells** the rest of the LNG production to the LNG Local Distribution Company through a **FOB LNG SPA**

- **Liquefaction Terminal Company**
  - Arranges the **construction** of the liquefaction terminal through an EPC contract.
  - **Operates the plant** for the Marketing Company in a **tolling scheme**

- **LNG Export Company:**
  - **Purchases the LNG** FOB to be exported
  - **Contracts** the maritime transportation
  - **Sells the LNG** DES in European markets

- **LNG Local Distribution Company**
  - **Purchases the LNG** FOB for the local market
  - **Manages the local transportation fleet** (LNG tanker trucks)
  - **Manages** the satellite plants
  - **Sells the regasified natural gas to local customers (industrial customers or distributed power plants)**

3. SMALL-MID SCALE LNG LIQUEFACTION TECHNOLOGIES

A general description of the liquefaction technologies potentially applicable for 1 mtpa capacity plants is included in this section.

High efficiency cooling is necessary to liquefy the natural gas by condensation. This could be achieved by two different methods:

- Forcing the gas to develop a reverse thermodynamic cycle, i.e. expanding it after being compressed and cooled (in one or several steps).
- Allowing a heat exchange between the gas and a cooler fluid known as refrigerant or coolant. The refrigerant has been chilled previously by a reverse thermodynamic cycle.

These two liquefaction methods are applied in different technologies that can be classified according to the refrigerant nature or the thermodynamic cycle. Thus, the applicable technologies for the capacity range considered in the study can be divided into three main groups:

1. Technologies based on **expansion refrigeration cycles**
2. Technologies based on **single mixed refrigerant cycles (without pre-cooling)**
3. Technologies based on **pre-cooling combined with a mixed refrigerant cycle**

More complex technologies based on multiple refrigeration cycles (i.e. optimized cascade of dual mixed refrigerant) are not covered by this review as the simplicity of the process is a determinant factor to select an optimal technology.

3.1 Technologies Based on Expansion Refrigerant Cycles

This technology does not comprise the change in phase of the refrigerant fluid (the coolant remains as a gas through the process). The refrigerant is a gas that follows a reverse Brayton cycle. Steps in this cycle are: compression-cooling (at high temperature)-expansion-heating (at low temperature); no phase change takes place, so the refrigerant fluid is gaseous all through the cycle. Refrigerant heating is used to cool down and condensate the natural gas. A single main cryogenic heat exchanger (MCHE) is used for this central step of the process.

Technology based on expansion refrigerant cycles is widely used on peak-shaving installations. Peak-shaving plants offer a very low production rate (0.1 – 0.2 mtpa), although some technologist are promoting the development of higher production rates.

The main positive facts of this process are: simple start up/operation/shut down, use of non flammable refrigerants in most of the facilities, direct generation of refrigerant, modularity, compactness and lightness compared to equivalent size plants.

This type of process is a well considered candidate to be used at offshore installations (floating liquefaction) due to safety reasons as there is no need to place hydrocarbons reservoirs on board. However, the safety restrictions that apply on offshore facilities are not so relevant when the installation is placed onshore as the safety distances can easily be observed.

Finally, another major positive factor is the simplicity of the process that allows quick and easy start-up's reducing the amount of gas vented or flared.

On the other hand, the major handicaps of this technology, against mixed refrigerant processes are: **the lower efficiency**, the higher requirement on refrigerant fluid and the higher number of rotary systems. In order to improve the low efficiency of the process, expansive engines are used instead of Joule-Thompson valves. The expansive engines recover part of the dynamic energy involved in the process, which is usually applied by a shaft on the compression stage.

Due to the interest of the offshore liquefaction business, there has been a significant interest on developing this particular type of technology. Latest improvements have increased the production capacity of the newest facilities to 1 mtpa. This production capacity makes the technology based on expansion refrigerant cycles relevant to be considered on this report.

Technologies based on expansion cycles could be classified as:

- Technologies based on the expansion of nitrogen
- Technologies based on the expansion of natural gas (feedgas or boil-off gas)
- Gas expansion technology combined with other processes.

Current research on this technology is focus on the improvement of the liquefaction efficiency as well as of the facility itself, reducing the amount of industrial equipment and allowing the manufacturing of independent modules.

3.1.1. Technologies Based on the Expansion of Nitrogen

The nitrogen refrigeration cycle is commercially owned by different companies as a single cycle or as combination of many cycles. In this process, the nitrogen is used as a gas reproducing an inverse Brayton cycle.

As it can be observed in the following figures, there are different processes based on this technology and offered by different process licensors:

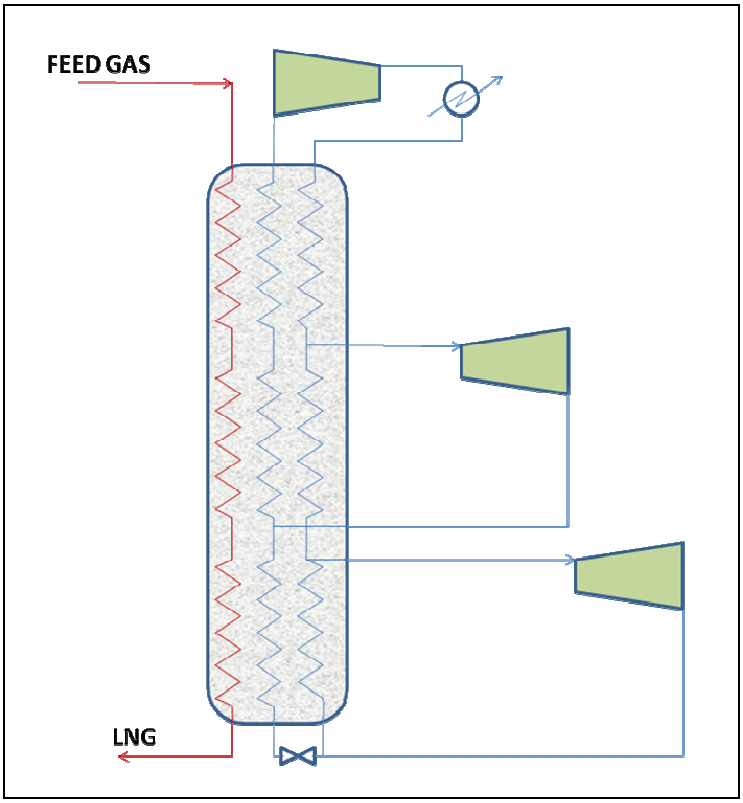

Nitrogen expansion process by APCI

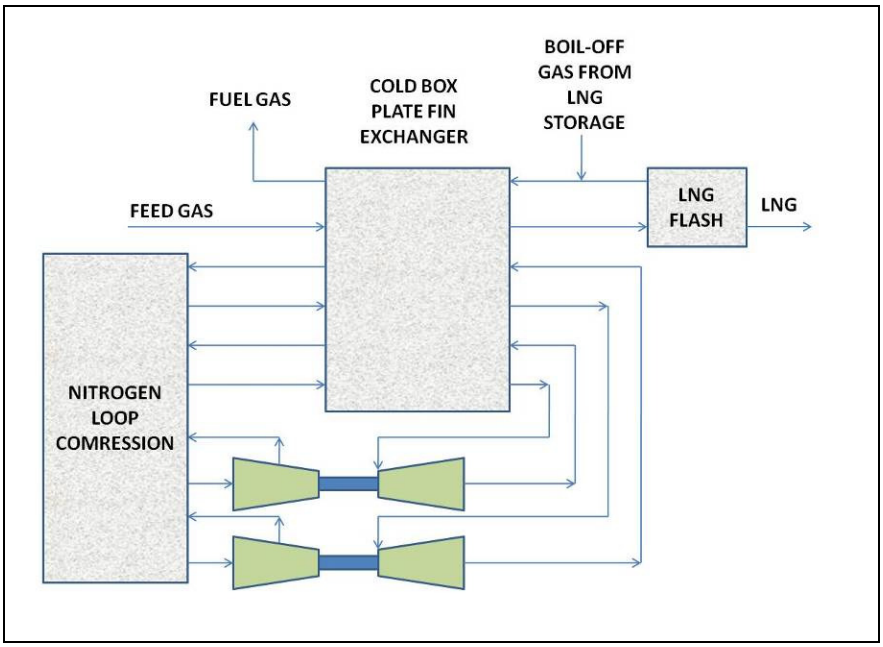

NDX-1 process by Mustang

In the process diagrams shown below, the nitrogen works at different pressure rates. Several expansive engines recover part of the compression energy transferring it back to the compressors.

The heat exchange from the natural gas to different coolant streams takes place in a main heat exchanger. The aim of the operation is to maximize the efficiency of the process. This is achieved performing a heating curve for the refrigerant as close and parallel as possible to the gas natural heating curve. The main heat exchanger is usually formed by series of tubes or by aluminium plate-brazed.

As it has been mentioned above, this processes use not-flammable refrigerant becoming very attractive for floating installations. In fact, this technology has been chosen to be installed at the Q-Max and Q-Flex LNG carriers. The diagrams of those installations can be observed in the following diagram:

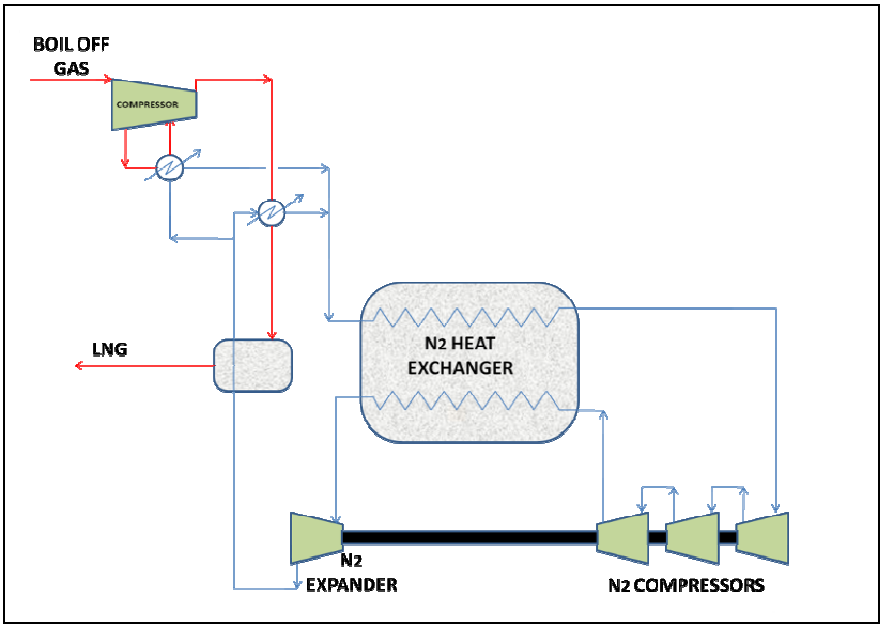

EcoRel process by CRYOSTAR

3.1.2. Technologies Based on the Expansion of Natural Gas

This type of process replaces the nitrogen cycle by an inverse cryogenic Brayton cycle applied to the natural gas so there is no need of a refrigerant fluid. The following diagram shows a typical arrangement:

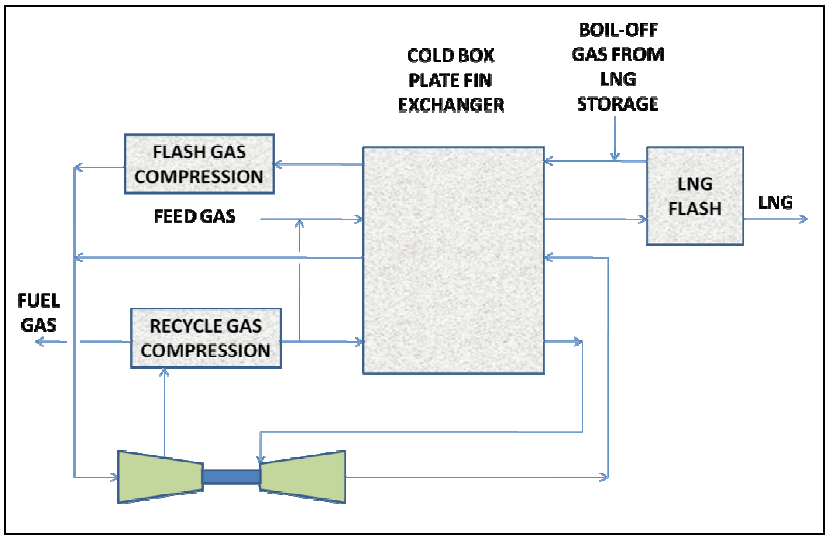

OCX-2 process by Mustang

A single or many expansive engines are used in order to recover part of the energy contented in the pressurized gas. The design of the expansive engines is the main difference among the different process based on this technology.

3.1.3. Gas Expansion Technology Combined with other Processes

In order to improve the efficiency of the liquefaction process and to reduce the fuel gas consumption, the expansion process is complemented by another simple cooling cycle. The extra cycle added to the expansion process can be either a pre-cooling stage by propane or ammonia (i.e. an inverse Rankine cycle) or a double gas cycle of methane and nitrogen that reduces the amount of refrigerant stored.

The exchange of heat is carried out in a single cryogenic heat exchanger unit that allows the flow of different streams through various independent channels.

The following diagrams show the process with a propane pre-cooling stage:

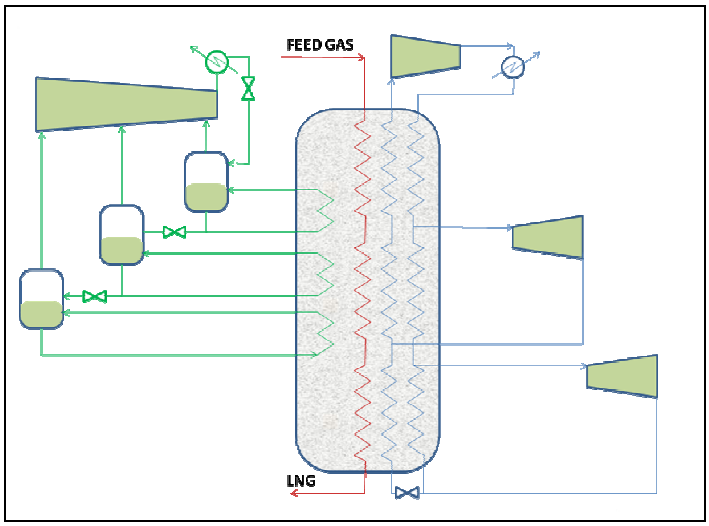

Propane pre-cooling stage by APCI process

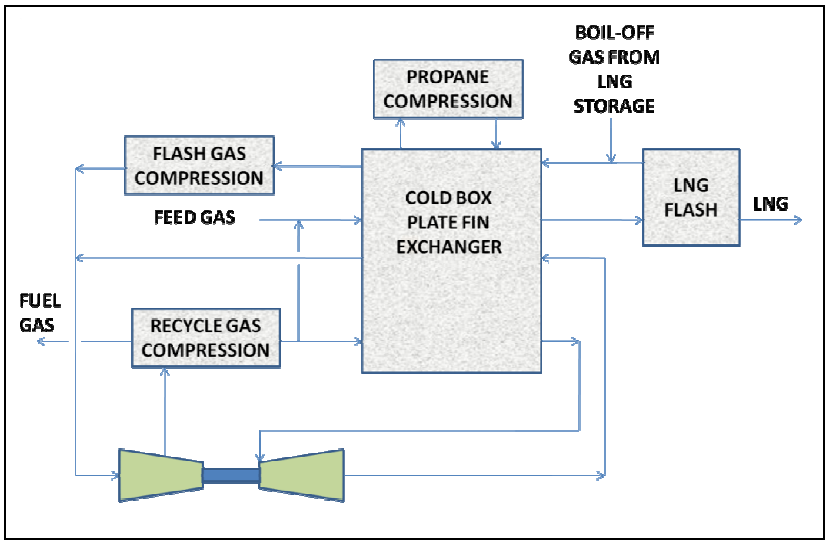

OCX-R process by Mustang

3.2 Technologies Based on Mixed Refrigerants Without Pre-cooling Stage

Mixed refrigerant suffers a double phase change: liquid to gas (evaporation) and gas to liquid (condensation).This single mixed refrigerant process (SMR) is basically an inverse Rankine cycle where the gas is chilled and liquefied in a single heat exchanger (MCHE). The refrigerant is a mixture of several compounds (mainly hydrocarbons and nitrogen) and follows a reverse Rankine cycle with the following stages: compression-cooling-condensation (at a high temperature)-expansion-evaporation (at a low temperature).

There are different technologies of SMR available in the market with references of this process since the 1970´s. Among all the mixed refrigerant processes, the SMR provides simpler configurations of the facilities, allowing a lower CAPEX, less requirement of site area, easier start up process and lower maintenance costs. However, the operation of the facilities based on this technology demand a higher cost in terms of energy consumption.

The composition of the mixed refrigerant depends on the specific requirements of the site and is mainly formed by: methane, ethane, propane, butane, pentane and nitrogen mixed in different proportions to optimize the energy consumption of the process. The efficiency of the process is optimal when the curve of the evaporation of the refrigerant is identical to the cooling and liquefaction curve of the natural gas.

The following diagrams show a process that operates with a mixed refrigerant cooling cycle:

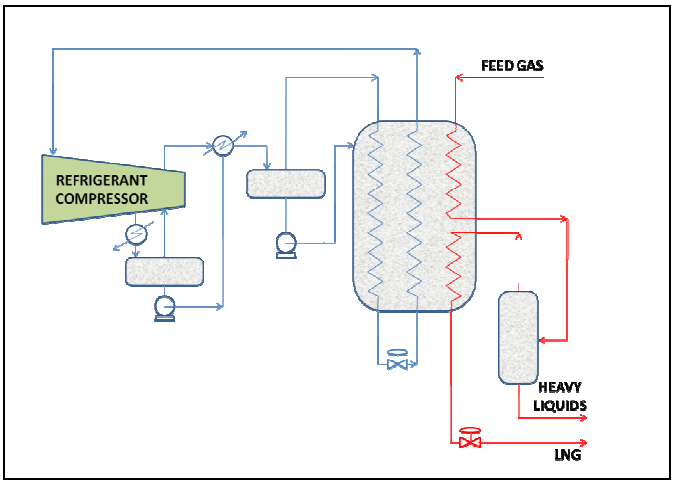

PRICO process by Black & Veatch

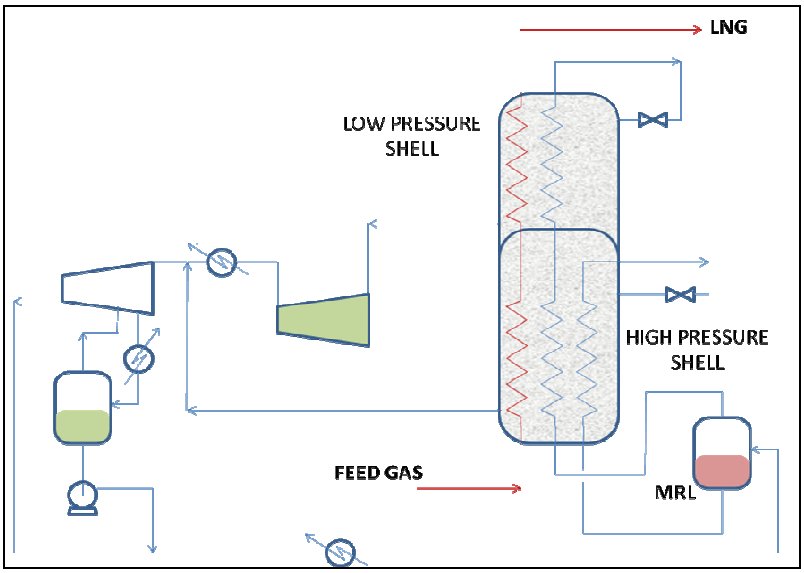

AP-M process by APCI

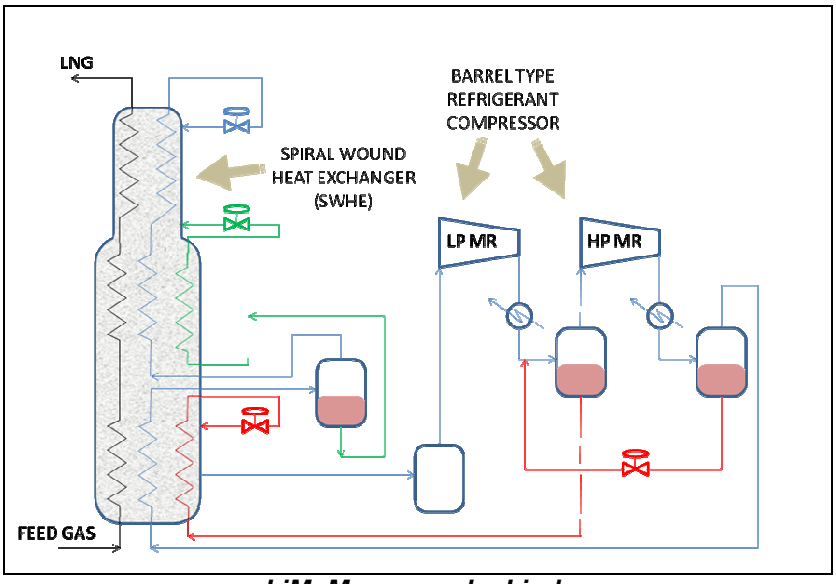

LiMuM process by Linde

The process comprises different principal elements such as the refrigerant compressors (usually two of them but in some cases a single one) and a main cryogenic heat exchanger where the natural gas is chilled and condensed. This heat exchanger is usually a multi-tubular wound inside a shell or series of aluminium braze-plates.

The mixed refrigerant usually operates at different pressure ratios in order to reduce the amount of gas required as the efficiency is also improved.

Once in operation, the facilities that operate by this process have the possibility of withdrawing heavier hydrocarbons from the natural gas stream. These heavier compounds can be used as components of the mixed refrigerant fluid, becoming the facility in an independent site regarding the refrigerant fluids.

3.3 Technologies With Pre-cooling Cycle and Mixed Refrigerants

During the last 30 years, the most popular technology among the liquefaction plants is the pre-cooling cycle combined with mixed refrigerants.

This technology adds a pre-cooling stage to the mixed refrigerant reverse Rankine cycle, reducing the energy consumption of the overall process (by increasing the efficiency). This extra cycle is used to pre-cool the natural gas and/or to cool and condensate the refrigerant. This pre-cooling stage is usually generated in a reverse Rankine cycle or in an absorption cycle. The downside of this modification is the higher complexity of the resulting installation.

The pre-cooling stage is used for two different applications:

- To cool down the feed gas that will be liquefied
- To condensate the mixed refrigerant used in the main refrigeration cycle

There are different options to this additional cycle:

- Refrigeration with propane following an inverse Rankine cycle
- Refrigeration with ammonia following an inverse Rankine cycle
- Refrigeration with ammonia following an absorption cycle (taking advantage of the residual heat produced by the turbine's output that act on the main compressors)

This technology can also use a main cryogenic heat exchanger (wound tubes inside a shell or aluminium brazed-fin).

The following figure shows different solutions proposed by different liquefaction process licensor of mixed refrigerant with pre-cooling cycle:

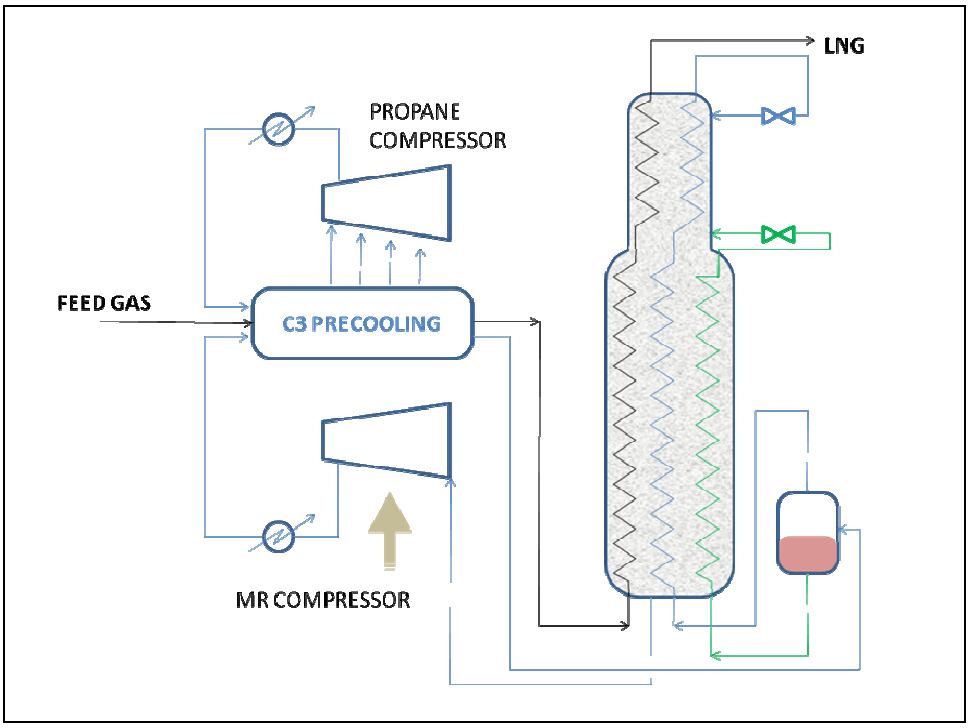

C3-MR process by APCI

3.4 Small-Mid Scale Project References

The following table lists some technologies described previously.

Mid-scale liquefaction plants review
(capacity between 0.1 and 2 million tons of LNG per annum)

Technologist	Process	Liquefaction Train Size	Industrial references / projects under construction / proposed projects
APCI	Double cycle of N2	< 0.2 mtpa	Peak-shaving plants (e.g.: Hopkinton, 0.12 mtpa)
	Double cycle of N2 + Pre-cooling	< 0.7 mtpa	
	AP-M™ Single MR	0.5 - 1.8 mtpa	4 trains of 0.8 mtpa at Marsa el Brega site (Lybia)
	C3MR	1.4 - 4 mtpa	In 2004, 55 trains running and 9 under construction: 72% of the Global production
Black & Veatch	PRICO	< 1.5 mtpa	* P*eak-shaving* plants (25% of installed capcacity in USA) * 1 train of 0.85 and 2 trains of 1.25 mtpa at Skikda (Argelia) * Proposed proyects: -Xinjiang Guanghui New Energy Company Syngas & LNG Plant 0.48 mtpa (start up in 2009) -Dazhou Huixin Energy Source 0.27 mtpa (start up in 2008)
Technip	TEAL		3 trains of 0.85 mtpa at Skikda 1 (Argelia)
Kryopak	Kryopak EXP	< 0.1 mtpa	Weizhou Island (China) 0.04 mtpa
	Kryopak PCMR	< 0.1 mtpa	*Karratha site (Australia) 0.07 mtpa *Peru site (Irradia Gas Natural) 0.1 mtpa under construction
Linde	LiMuM	< 2.5 mtpa	*Shan Shan site (Xinjiang, China) 0.43 mtpa *Nordic LNG site at Risavika (Noruega) 0.3 mtpa under construction. *Generic *FEED* with SBM for a 2.5mtpa (FLNG) plant.
Mustang Eng.	Double cycle of N2 (NDX-1)	< 0.65 mtpa	Feasibility studies for onshore LNG sites: *Murphy Oil Corp.: feasibility study for monetization of associate gas. *Woodside Energy: evaluation of different approaches for liquefaction and transportation of gas and liquid in Western Africa. *Shell Global Solutions: development of business opportunities for stranded gas (Western Africa)
	Open expansion cycle (OCX-2)	< 0.55 mtpa	
	Open expansion cycle + pre-cooling (OCX-R)	< 0.75 mtpa	
BHP	Double cycle of N2	< 1.5 mtpa	Study compiled for the Bayu-Undan field (Timor Sea) in 1998 (BHP sold the field to Phillips)
CB&I Lummus	Niche LNG	< 0.85 mtpa	*Experience on mid-scale plants (e.g.: Pickens plant 0.06 mtpa) **FEED* in progress with Höegh LNG (FLNG)
Hamworthy	Simple cycle of N2	< 0.2 mtpa	*Peak-shaving plants *Small scale plant at Kollsnes (Norway), 1 train of 0.04 mtpa and a second of 0.08 mtpa
LNG Limited	AA-MR	< 1.6 mtpa	Proposed projects: *Papua New Guinea plant 1.3 mtpa *Planta Gladstone "Fisherman's Landing" LNG (Arrow Energy) 1.3 mtpa *Planta Qeshm LNG (Iran) 3 x 1.15 mtpa

The table below shows the result of a previous scattering and analysis among some of the existing or proposed LNG plants on global basis. The selected plants comply with a series of statements in order to be considered:

- Production capacity between 0.1 and 2 mtpa
- *On-shore* location
- Production rate reached on standard conditions
- Liquefaction process licensor and EPC focus mainly on plants of the described capacity

Liquefaction projects with capacity between 0.1 and 2 (partial list)

Plant	Location	Capacity per train MMTPA	Total Capacity MMTPA	Status	Start up year	Owner	Liquefaction process licensor	Remarks
Shan Shan LNG Plant	China	0,43	0,43	In Operation	2004	Xin Jiang Guanghui LNG Development Co	LINDE	
DaZhou LNG	China	0,27	0,27	Under Construction	2008	China Gas Holdings Ltd	PRICO (B&V)	
Xinjiang	China	0,40	0,40	Proposed	2009	Xin Jiang Guanghui New Energy Company LNG / Syngas	PRICO (B&V)	
Ordos LNG1	China	0,27	0,27	Under Construction	2008	Unknown	PRICO (B&V)	
Ordos LNG2	China	0,30	0,30	Unknown	Unknown	Unknown	PRICO (B&V)	
Jingbiang	China	0,10	0,10	Under Construction	2009	China Gas Holdings Ltd	PRICO (B&V)	
Zhuhai (CNOOC)	China	0,15	0,15	Under Construction	2008	CNOOC Guangdong LNG Ltd.	PRICO (B&V)	
Wuxi Yongda	China	0,20	0,20	Under Construction	2010	Unknown	Unknown	
Irradia LNG	Peru	0,16	0,16	Under Construction	2009	Irradia J.V. (Applied LNG Tec. Inversiones Wineca & Energy Partners)	Kryopak	
Qeshm- LNG Limited	Iran	3 x 1,15	3,45	Proposed	2012	LNG International Qeshm Pty Ltd & Civil Pension Fund. Company Iran	Unknown	
PNG- LNG Limited	Papua New Guinea	2*1,3	2,60	Proposed	2012	Liquefied natural Gas Limited	Unknown	Ammonia absorption Process
Galveston LNG	Australia	1,30	1,30	Proposed	2013	Galveston LNG	Unknown	Coal- Bed Methane
Sunshine Gas, Sojilt Gladstone LNG	Australia	0,50	0,50	Proposed	2012	Sunshine Gas (30%) & Sojilt (70%)	Unknown	Coal- Bed Methane
Fisherman's Landing LNG LNG	Australia	1,30	1,30	Proposed	2012	Golar LNG (33%) Liquified Natural Gas (33%) Arrow Energy (33%)	Unknown	Coal Bed Methane. Ammonia absorption Process
Sengkang	Indonesia	4 x 0,5	2,00	Under Construction	2009	Energy World Corporation Ltd	Open art Technology CHART	
Donggi Senoro	Indonesia	2,20	2,20	Proposed	2010	Mitshubishi(51%) Pertamina (29%) Medco (20%)	Unknown	
Kollsnes I&II	Noruega	0,13	0,13	In Operation	2004	Gasnor	Open Art Tec. CHART	Expansion of an existing plant
Nordic LNG	Noruega	0,30	0,30	Under Construction	2010	Skangas 60 %, Skaugen 40%	LINDE	

With the information available on the table above, a series of charts have been plotted to show some concepts of the middle scale LNG projects:

1. Most of the projects are based in Asia, mainly in China, where LNG truck distribution is extensively done.
2. There is **no project to be located in Africa** and there is only one for South America.
3. In Europe there is only one project to be located in **Norway,** where exists a widely developed small scale market.

Mid-scale LNG Liquefaction Projects (0.1 - 2 MMTPA)

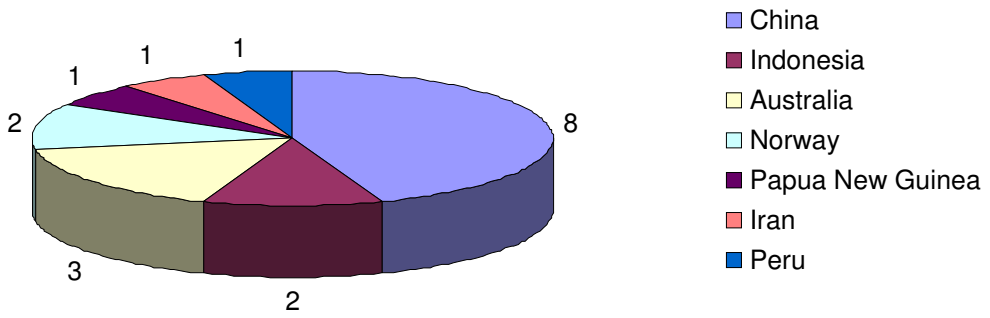

Chart number 2 shows two sites in operation on this range of capacity, meanwhile eight projects are under construction. Another one is planned to start up by 2009.

Mid-scale Project Stage (0.1 -2 MMTPA)

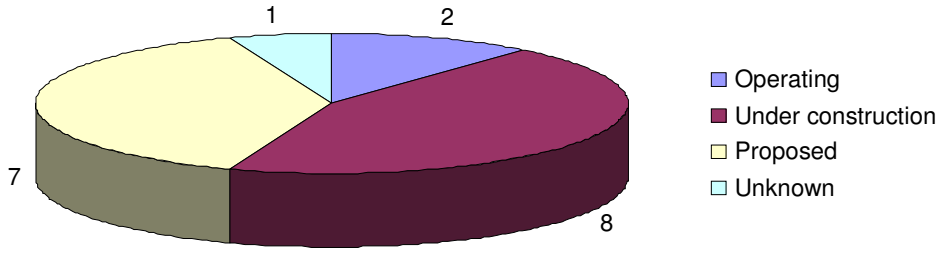

Focus on the **production capacity** distribution, the following chart shows that the only two plants in operation have a capacity rate below 0.5 mtpa, similar to the projects under construction. On the other hand, the proposed projects **tend to increase that capacity**.

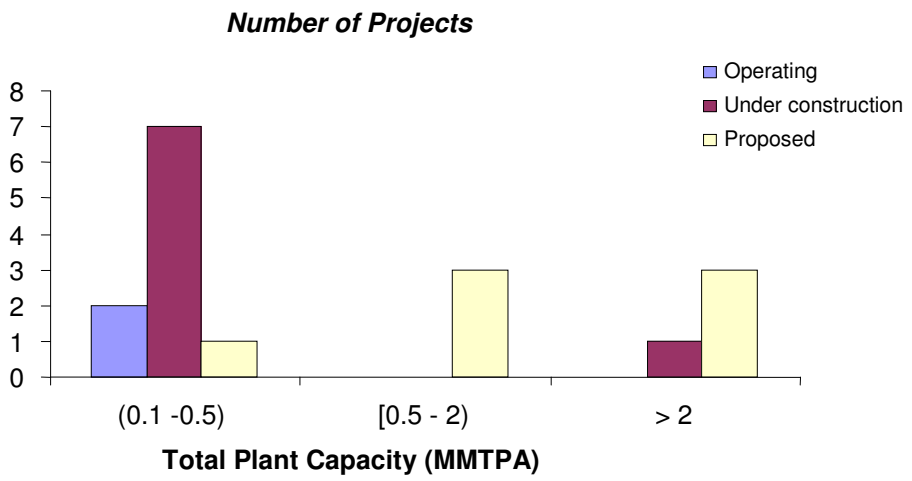
Number of Projects
Operating
Under construction
Proposed
8
7
6
5
4
3
2
1
0
(0.1 -0.5)
[0.5 - 2)
> 2
Total Plant Capacity (MMTPA)

4. LNG TRANSPORTATION AND LOCAL REGAS

4.1 LNG Transport for Export Markets

Maritime transport will be **contracted** by the **Marketing Company**, as it will acquire the LNG on FOB terms.

The Maritime transport analysis results have been obtained using a standard LNG carrier of **138,000 m^3** capacity**.**

138.000 m^3 LNG carrier specifications	
Length Overall (LOA)	285.00 m
Beam (B)	42.50 m
Depth, moulded (D)	25.00 m
Draft (T)	11,38 m
Gross Tonnage (GT)	91,000 GT
Cargo Movement	97,800.00 tons
Cap. Cargo 100%	138,000 m^3
Speed	19,8 knots
Horse power	37,940 HP
Number of tanks	4
Cargo Containment	Membrane

The economic model considers the impact of a fluctuating usage depending on cargo volume and maximum capacity.

4.2 LNG Transportation for Local Market

4.2.1. Basics

The study considers the distribution of LNG for local consumption by using a fleet of LNG tanker trucks that will feed the (regasification) satellite plants.

For the above components, dimensions and specifications are described (distances, consumption, capacities, utilisation ratios, etc.) as well as capital expenditures and operational expenditures (CAPEX and OPEX).

A fleet of LNG tank trucks will distribute the LNG produced in the liquefaction plant to a series of satellite plants throughout the country.

There will be a number of delivery points (satellite plants), that can be origin of isolated distribution networks. Some of these satellite plants may serve industrial premises or small energy generators (alternative gas engines).

4.2.2. Equipment

In this section the equipment intended for the local distribution through a fleet of LNG tank trucks is described.

The land transport of the LNG will be done in ten-wheel tank trucks. The truck's tanks have a total volume of 35 m^3 (30 m^3 of LNG at 85% maximum load).

Although there are bigger LNG tank trucks in the market (up to 56 m^3), these smaller tanks are the ones that best adapt to the road network of the area.

There are two standard technologies for the LNG tank insulation: vacuum insulation and polyurethane insulation. The vacuum type has been chose for the analysis as it has two main advantages over polyurethane:

- Better insulation, which allows a smaller vaporisation rate (0.13% daily rate against a 1.3% daily rate with the polyurethane type)
- The tank is more robust as it consists of two concentric shells.

The trucks ought to cover an average 600 km from the liquefaction plant to the satellite plants. 120 of these kilometres are on roads with no asphalt or with very poor pavement which will make the trucks drive at reduced speed (approx 25 km/h). The rest of the trip will be done at 60 km/h average speed.

The tanks have a manifold with three valves two for liquid and one for the displaced vapours.

At the liquefaction plant, only one of the liquid valves for the intake of the LNG and the vapours return valves are connected

For discharge, the three valves are used. The smaller liquid valve is connected to the fast pressurisation vaporiser at the satellite plant (see 5.3). The outlet of this vaporiser is

connected to the vapour valve of the tank. The pressure in the tank increases and the LNG flows to the plant storage tank through the second liquid valve.

4.3 Local LNG Regasification (Satellite Plants)

4.3.1. Basics

Several satellite plants are planned throughout the development area at an average distance of 600 km from the liquefaction plant (as described in 5.2). As a matter of simplification all these plant are considered to be identical.

The emission outlets of these plants are the points at which the gas will be delivered to the clients and the point at which the gas is to be paid.

Together, the satellite plants shall deliver gas for a 20% equivalent of the LNG produced at the liquefaction plant. With these hypotheses and considering a 365 days operation of the satellite plants (enough redundancies are provided to allow this), these are the basic parameters for each of the proposed satellite plants:

- Average LNG daily intake: **120 m^3/day** (4 trucks)
- Average emission: **3,200 Nm^3/h**
- Maximum emission capacity: **6,000 Nm^3/h**
- LNG Storage capacity: **480 m^3** (4 days at average consumption)

4.3.2. Site Description

A LNG satellite plant has these basic features:

- Truck unload system
- Storage and auxiliary system
- Vaporisation system
- Control system
- Safety and fire fighting system
- Regulation and measurement station
- Electric system
- Buildings and shelters
- Urbanisation

The LNG tank truck **discharge** is done through the connection of the tank truck to the storage tank in the satellite plant, by means of two piping systems, a fixed one (pipes) and short cryogenic hoses, which are the ones that are connected to the tank truck.

The discharge is done by pressurizing the LNG tank truck. To do this, a small amount of LNG is sent to a vaporiser called "of fast pressurisation". The outlet of this vaporiser is sent back to the tank through another cryogenic hose

A tank truck discharge is estimated to take an hour.

The LNG is stored in cryogenic tanks. These cylindrical tanks can be placed either vertically or horizontally and they have two shells: the internal one built in stainless steel and the external one of steel. The space between the vessels is filled with expanded perlite and vacuumed, to reduce the heat exchange with the environment.

The LNG in the storage tank is extracted by pressurisation. A small vaporiser per tank maintains the internal pressure and makes it possible for the plant to feed gas to the distribution network or the end clients associated with the plant.

The satellite plant will have **four** (4) storage tanks with 120 m^3 capacity each.

The LNG from the storage tanks is sent to the vaporisation unit. This facility vaporises and heats the LNG to parameters compatible with the distribution network. The unit comprises a series of finned tubes through which the LNG and the vaporised gas is circulated, using air for heat exchange no further energy supply is needed.

A layer of ice and sleet builds up on the vaporisers while in operation, which makes it necessary to periodically disconnect them from the LNG flux and allow for their natural reheating.

The satellite plant will have a peak vaporisation capacity of **6,000 Nm^3/h** with ten (10) vaporization groups of 600 Nm^3/h. This type of facility allows for almost 100% redundancy at the average emission rate.

5. COST ESTIMATION

5.1 CAPEX

This section describes the Capital Expenditures (CAPEX) required for the implementation of the project systems and equipment.

Costs are estimated for prices on the second quarter of 2009.

5.1.1. Liquefaction Plant

5.1.1.1. Estimation Methodology

The investment **estimation** for an industrial asset starts with the definition, more or less detailed, of the systems and equipment **comprised within the asset**. In previous sections the available technologies available for this project have been described. For a more detailed definition of the investment cost, the definition of the technology to be used becomes mandatory.

The Cost Estimate Classification System provides guidelines for applying the general principles of estimate classification to project cost estimates (i.e., cost estimates that are used to evaluate, approve, and/or fund projects). The Cost Estimate Classification System maps the phases and stages of project cost estimating together with a generic maturity and quality matrix. Taking into consideration the development stage of the project, The CAPEX estimation falls within **Class 5** (prospect estimate) in accordance with the *Advancement of Cost Engineering International* (AACEI), which gives us an expected accuracy of around **+70% y -50%** at this step for this specific project**.**

Cost estimate classification matrix for the process industries. Source: AACEI

	Primary Characteristic	*Secondary Characteristic*			
ESTIMATE CLASS	**LEVEL OF PROJECT DEFINITION** Expressed as % of complete definition	**END USAGE** Typical purpose of estimate	**METHODOLOGY** Typical estimating method	**EXPECTED ACCURACY RANGE** Typical variation in low and high ranges [a]	**PREPARATION EFFORT** Typical degree of effort relative to least cost index of 1 [b]
Class 5	0% to 2%	Concept Screening	Capacity Factored, Parametric Models, Judgment, or Analogy	L: -20% to -50% H: +30% to +100%	1
Class 4	1% to 15%	Study or Feasibility	Equipment Factored or Parametric Models	L: -15% to -30% H: +20% to +50%	2 to 4
Class 3	10% to 40%	Budget, Authorization, or Control	Semi-Detailed Unit Costs with Assembly Level Line Items	L: -10% to -20% H: +10% to +30%	3 to 10
Class 2	30% to 70%	Control or Bid/ Tender	Detailed Unit Cost with Forced Detailed Take-Off	L: -5% to -15% H: +5% to +20%	4 to 20
Class 1	50% to 100%	Check Estimate or Bid/Tender	Detailed Unit Cost with Detailed Take-Off	L: -3% to -10% H: +3% to +15%	5 to 100

Notes: [a] The state of process technology and availability of applicable reference cost data affect the range markedly. The +/- value represents typical percentage variation of actual costs from the cost estimate after application of contingency (typically at a 50% level of confidence) for given scope.
[b] If the range index value of "1" represents 0.005% of project costs, then an index value of 100 represents 0.5%. Estimate preparation effort is highly dependent upon the size of the project and the quality of estimating data and tools.

The CAPEX estimation comes from comparative analysis of similar projects. It must be considered that this estimation methodology (using exponential formula) can overestimate some of the items, but, in any case, the variation is within the precision range indicated.

Estimations are based in a **generic location in southern Africa**. Costs have been adjusted to the chosen configuration. The adjustments on the basis of capacity (using the

exponential estimation methodology), plant design and site configuration. The main parameter has been the **cost for the supply of the main equipments**.

The costs associate with previous studies and early phase engineering have also been included.

To calculate the CAPEX estimation, the following liquefaction plant configuration has been used:

- Feed Gas treatment unit comprising:
  - Inlet reception and liquid separator
  - Dehydration Unit and Hg removal
  - Acid gases removal
- Liquefaction train of 1 mtpa of LNG output, using mixed refrigerant (single loop) without precooling technology
- One LNG storage tank of 150,000 m3 (single containment)
- Jetty to receive LNG carriers up to 138,000 m3
- LNG tank trucks loading facilities
  - Frequency of loads: 40 tank trucks/day
  - 1 hour loading time per tank truck (load rate: 50 m3/h)

For CAPEX estimation **two Lump Sum Turn Key** (LSTK) have been considered:

- **Plant EPC LSTK**: Including, conditioning, liquefaction train, LNG recuperation, *utilities*, storage tank, *offsite*, tank loading system and electricity generation (self supply).
- **EPC LSTK Jetty:** including Jetty (without breakwater), LNG loading and discharge installation and torch.

5.1.1.2. Cost Estimation Breakdown

CAPEX Liquefaction plant	MMUSD (2009)
Plant	790.5
Tank	119.6
Jetty	184.3
TOTAL	**1,094.4**

Notes:
- CAPEX estimation to 2nd quarter of 2009 pricing levels (escalated in the economic model)
- Each individual point allows for contingency.
- The *EPC* cost includes the contractor's profit.
- Cost such as: Permissions, local tax, Duties/Nationalisation costs, cost of the land for the site, business unit costs has not been included here, but have been considered in the economic model.

Development costs include:

DEVELOPMENT COSTS	
Studies and permissions	
FEED	
Owners engineering	
EPC supervision (PMC)	
Training O&M	
Starting up consultancy	
Engineering	
Social activities	
Other	
TOTAL DEVELOPMENT COSTS	**62.1 MMUSD**

5.1.1.3. Liquefaction Plant CAPEX Analysis

The investment unit cost is **1,156.5 USD / tpa of LNG production capacity**.

The small scale of the facility can affect cost in two opposite ways: first, the small plant capacity does not allow for economies of scale making the unit cost higher. On the other hand, the related process is less complicated, which reduces the number of required equipment and the complexity of the design, so costs would be reduced.

The unit costs for a liquefaction plant are currently in the range of 750-1,000 USD/tpa for plants with 3-5 mtpa capacity. Equipment providers for small scale LNG plants indicate that their cost can be lower than the standard unit costs, which is not the case in the exponential estimation performed.

The lack of definition of the process and the precise localisation of the plant leads to an economic estimation with a significant uncertainty.

5.1.2. Local Market

5.1.2.1. Satellite Plant

The investment budget for the satellite plant described in 4.3.1 is as follows:

SATELLITE PLANT
Storage tanks
Vaporisation systems
Other systems and buildings
Engineering and development
Contingency (20%)
TOTAL CAPEX Satellite Plant 1.92 MMUSD/plant

5.1.2.2. LNG Tank Trucks

The total cost per LNG tank truck (35 m3 capacity) used for the local distribution of LNG (as described in 5.2) is **275,000 USD,** of which **125,000 USD** are for the truck chassis-engine and **150,000 USD** for the cryogenic LNG tank.

Considering the level of activity, each truck chassis-engine would be replaced every four years, while the LNG tank has an estimated life of 25 years, the project lifetime.

5.2 OPEX

The **Operating Costs** (OPEX) of an industrial unit can be summarised in the following basic items:

- **Personnel**: this item mostly depends on the general state of the economy and the development of the area from which the workforce is contracted. In this particular case an average of **35,000 USD/person-year** has been considered (except for trucks drivers with an average of **20,000 USD/person-year).**
- **Energy:** the facilities will be in need of energy for their operation, which could be obtained as electricity by burning fuels.
- **Other**: While in operation the unit will demand other basic supplies raw materials, manufactured goods, chemicals, etc.
- **Maintenance:** To allow a seamless operation of the plant, maintenance (predictive and corrective) is crucial.

The costs of all these items are evaluated below.

All 2009 values, adjusted with the yearly predicted inflation, except fuels, that take **Brent index** as reference.

5.2.1. Liquefaction Plant

Calculation Basics: the following estimations have been assumed:

- **Facility personnel**

  - **Operating personnel**:
    5 turns, with a total of 40 persons.

  - **Maintenance personnel**:
    8 persons.

  - **Administration personnel:**
    9 persons.

  That makes a total workforce of **57 persons**, with an average annual cost of 35,000 USD/year each.

- **Consumables**
  There are two core types of consumables:

  - Refrigerants

    Within the operation of an LNG liquefaction plant a certain refrigerant loss is assumed. These losses are mainly through the purges of the seals of the refrigerant compressors.

    Due to the composition range of the mixed refrigerants cycles used in liquefaction plants, the major losses are of ethane and propane

    The following are the estimation for the make-up**:**

    - Ethane 644 tpa
    - Propane 154 tpa

    With the following cost estimations:
    - Ethane 1,400 USD/ton
    - Propane 620 USD/ton

  - Chemicals

    The next items to consider are chemicals used for the gas **sweetening** unit (SO_2 and CO_2 extraction), turbine cleaning, fire fighting and lubricants.

    Based on previous experiences the total annual cost could be **824,000 USD.**

- Electricity

  The plant will operate as an **island**, so the gas consumption is included as self-consumption.

- Maintenance

  A **1.5%** of the total cost of the installed equipment is assumed as yearly maintenance cost.

- General administration

  Administration costs could be fixed at **20%** of the personnel wages plus the maintenance costs.

- Insurance and duties

  The yearly cost for insurance and duties would be of 0.75 % of the CAPEX.

OPEX summary of the liquefaction plant:

OPEX (MMUSD 2009)
Wages
Electricity (note 1)
Consumables
Maintenance
General Administration
Insurance and duties
TOTAL 14.96 MMUSD/year

Note (1): Electricity is generated at the facility. The electricity cost is included as part of the energy balance considered. The economic model assumes a tolling arrangement in which the burned gas is not included in the operating costs of the facilities, as it is assumed by the Marketing Company as a reduction in LNG obtained against the given volume of gas.

5.2.2. Satellite Plant

The OPEX for the satellite plant are:

- Personnel (5 persons on 5 turns)
- Electricity and other consumables
- Maintenance and reparation
- General administration, insurance, etc.

The OPEX considered for each plant is 218,000 **USD/year**

5.2.3. LNG Tank Trucks

The operating costs of the trucks:

- Fuel consumption: **40 l of diesel oil per 100 km**. The diesel oil price in each year is calculated from the international price of Diesel Oil 2% (which the model calculates by correlation to the Brent oil index; see section 7.2.3.) plus a 50% increase to account for local taxation.
- Maintenance and insurance: **0.3 USD/km** (inflation escalated)
- Drivers (2 drivers + 1 in resting, average wages of 20,000 USD/year):

  60,000 USD/ year per LNG tank truck (inflation escalated)

5.2.4. Other

The cost of the plot of land on which to build the facilities is consider as an annual cost of **0.5 MMUSD/year** (yearly rent) in 2009 plus yearly inflation rate

The plant will also have a social responsibility cost of **0.5 MMUSD/year** (fostering a technical training facility at secondary education level).

5.3 Maritime Transport Costs

For the export market, LNG carriers of 138,000 m^3 (total capacity) have been considered.

The hypothesis is a 5,000 nautical miles route through Suez Canal, from the liquefaction plant to the end market (Europe).

The operational and economical parameters are:

Item	Unit	Data
Ship capacity	m^3	138,000
Boil off	%/day	0.13%
Service Speed	knots	18.5
Daily consumption	mt/day	150
Port consumption	mt/day	30
Channel transit consumption	mt/day	100
Distance	Nautical miles	5,000
Loading port	days	1
port of discharge	days	1
Suez transit (round voyage)	days	2
Channel/port costs	USD	760,000
CAPEX	USD/day	58,945
OPEX	USD/day	20,614
Yearly operation	Days	365

The economic data (port/channel cost, CAPEX, OPEX) are 2009 values and they will be escalated with annual inflation.

As described in section 7.2.3, the economic model calculates the cost of maritime transport considering boil-off gas at the LNG FOB purchase price and the price of IFO380 fuel, both referred annually to Brent index and with the selected economic basis.

6. ECONOMIC MODEL

6.1 Economic Model Description

An economic model has been developed (in Microsoft Excel) that simulates the business plan for each entity of the Midstream part of the integrated chain:

- Liquefaction Plant Company.
- Marketing Company.
- LNG Export Company.
- LNG Local Distribution Company.

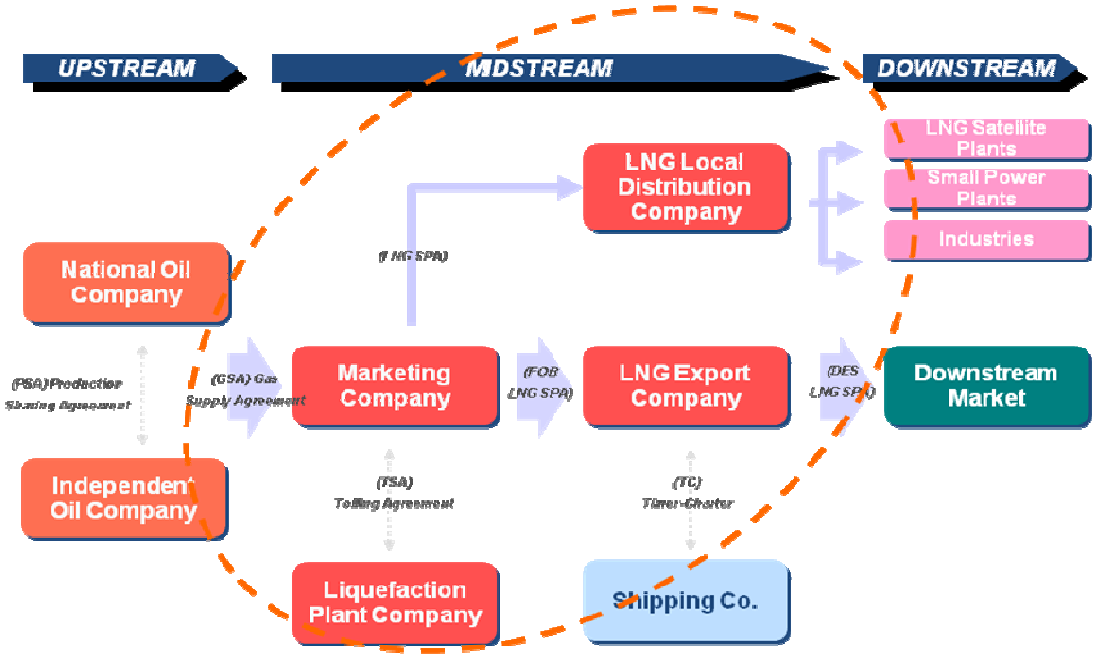

For each company the model reflects the **annual cash flows** from the investment phase up to the end of the Project (25 years operation), calculating the Net Present Value (NPV) of each part of the chain, and the total NPV (combination of the 4 NPVs).

The **LIQUEFACTION PLANT COMPANY** spreadsheet section includes the following concepts:

- **CAPEX investment** in the liquefaction plant
- **Income** for liquefaction services (tolling)
- **OPEX** expenses for the liquefaction activity
- Site location **leasing expenses**
- **Social programs expenses:** annual budget 0.5 MMUSD (inflation escalated) to promote social development and welfare in the plant area
- **15 years depreciation period** (project duration 25 years)
- **Profit tax** (30%)

Profit and losses statements for the **MARKETING COMPANY** consider:

- **Income** from LNG sales to export markets (FOB terms) (note: prices and fees indicated in section 7.2.4.)
- **Income** from LNG sales for local distribution (FOB terms) in the host country
- **Cost of feed gas** acquired from an upstream company (upstream business not integrated in this analysis) to feed the liquefaction plant
- **Cost of liquefaction services** under a tolling scheme
- **Profit tax** (30%)

LNG EXPORT COMPANY cash flow includes the following items:

- **Income** from LNG sales DES in the target market (Europe)
- **Cost** of LNG purchase (FOB terms)
- **Cost of** LNG maritime transportation to target market considering a dedicated LNG carrier of 138,000 m3 capacity
- **Profit tax** (30%)

For the local distribution, the model calculates the respective costs considering CAPEX and OPEX according the defined LNG tank trucks transportation system. In the **LOCAL DISTRIBUTION COMPANY** spread sheet, the profit & losses statement includes:

- **Income** from natural gas sales to the local market
- **Cost** of LNG purchase (FOB terms)
- **LNG tank trucks Fleet CAPEX and OPEX**
- **Satellite Plants CAPEX and OPEX**
- **15 years depreciation period for Satellite Plants**
- **Profit tax (30%)**

The results analysis includes the simulation of sensitivity of the principle variables (Brent, liquefaction CAPEX, etc.).

6.2 General Inputs to the Model

6.2.1. Configuration

In the model requires the input of the future projections of some indexes (such as Brent level, inflation, etc.).

In the base case it is assumed a fixed Brent level of 70 USD/Bbl during the lifetime of the Project and a 2% annual inflation. In section 8 there is a sensitivity analysis of the economic result with the Brent level variation.

6.2.2. Technical Data

The base case consists on a one train liquefaction plant with an LNG output of 1 mtpa, as described in 6.1. A summary of the costs is shown below:

	MMUSD (2009)
Development Costs	**62.1**
Plant	790.5
Tank	119.6
Jetty	184.3
Liquefaction Plant CAPEX	**1,094.4**
Liquefaction Plant OPEX	**14.9**

As it is described in the business model (section 3), 80% of the produced LNG is sold to export markets while the remaining 20% is addressed to the local distribution market.

It is considered a **construction period of 3 years**, with a previous development phase with a spending of **62.1 MMS development costs**.

In accordance to the technical information, it is considered that the liquefaction process requires the consumption of **12% of the feed gas** in the Plant. Therefore, it has not been considered any natural gas consumption in the Plant OPEX as they are included as losses for the marketing company (difference between quantities purchased and sold).

6.2.3. Index Scenario

The base case reflects a case with a fixed Brent level of **70 USD/bbl** during the Project lifetime and an annual inflation of **2%.**

All the simulations work with a **25 years operation time**.

The model requires as input the prices of the **shipping fuel IFO380** for the maritime transport costs calculation. The following linear correlation to Brent (based on historic data) is used:

IFO380 (USD/mt) = 4.65 * Brent(USD/bbl) + 9.37

The price of the natural gas for the local distribution market is based on the alternative fuel for power generation and local industry. **Diesel Oil 0.2% Sulphur** is the chosen reference, with the following linear correlation to Brent:

Diesel Oil 0.2% (USD/mt) = 9.09 * Brent(USD/bbl) – 3.23

6.2.4. Prices and Fees

The main prices in the boundary of the analysis (the export LNG DES sale price, local distribution natural gas sale price and the plant feed gas purchase price) set the level of the combined net present value of the overall case. Other prices and fees as the LNG FOB prices and the liquefaction fee, are between companies in the analysis and result in value transfers between different parts of the chain but they don't affect to the combined result.

The feed gas price considered (in USD/MMBtu) is **2% Brent (USD/Bbl)** for each year, which results in a reasonable value for the reserves development involved.

Regarding to the **LNG prices** (both FOB and DES), they have also been referred to the Brent Price so they can be competitive in its end markets (export and local). The FOB prices in the base case are **7.5% Brent** for the local market and **8.5% Brent** for the export market. The export market is therefore contributing to the development of the local market. The LNG for the export market is considered to be sold at a **DES Price in Europe** of **11% Brent** so it can be competitive (conservative estimation).

The sale price of the natural gas in the local distribution market has been referred to the price of an alternative fuel, i.e. to Diesel Oil 0.2%. To stimulate the use of natural gas in the local distribution market, its price has been modeled as a 60% of the Diesel Oil 0,2% price (assuming a heat rate of 41,7 MMBtu/mt of diesel oil).

Diesel Oil 0.2% price is also the reference fuel for the tank trucks for the local distribution of LNG. It is assumed that the local diesel oil price is the international Diesel Oil 0.2% quotation, as calculated in 7.2.3. above, with a 50% increase to include local fuel taxes.

For the liquefaction activity, the model is considering an annual tolling fee of **150 MMUSD** (in year 2009). This fee, which is escalated with inflation, gives an Investment Rate of Return (IRR) in accordance with the investment risk profile of the liquefaction activity (around 9%). This liquefaction fee results in an equivalent unit fee of **2.93 USD/MMBtu**.

The following table summarizes the main input data to the economic model:

Annual LNG Production	1.0	mtpa		
LNG for Export markets	0.8	mtpa	80%	
LNG for Local Distribution	0.2	mtpa	20%	
Annual Liquefaction Fee	150	MMUSD (2009)		
Plant	790.5			
Tank	119.6			
Jetty	184.3			
CAPEX Liquefaction Plant	**1094.4**	**MMUSD (2009)**		
OPEX Liquefaction Plant	**14.96**	**MMUSD/year (2009)**		
			For a 70 USD/bbl Brent (Base Case)	
Feed Gas Price	2%	Brent ---------->	1.40	USD/MMBtu
LNG FOB sale price for Local market	7.5%	Brent ---------->	5.25	USD/MMBtu
LNG FOB sale price for Export market	8.5%	Brent ---------->	5.95	USD/MMBtu
LNG DES sale price in Export market	11.0%	Brent ---------->	7.70	USD/MMBtu
Natural gas sale price for Local market	60%	Of Diesel Oil 2%->	9.11	USD/MMBtu
Profit Tax	30%			
NPV Discount Rate	10%			

7. RESULTS

7.1 Economic Results

The economic results for the base case are the following:

Base Case Results

	LIQUEFACTION	MARKETING	EXPORT GNL	LOCAL DISTRIB.	COMBINED NPV
NPV10% (MMUSD)	-53.9	91.5	84.7	54.4	**176.7**
IIR	9.4%			36.5%	
Repayment Period	9 years				

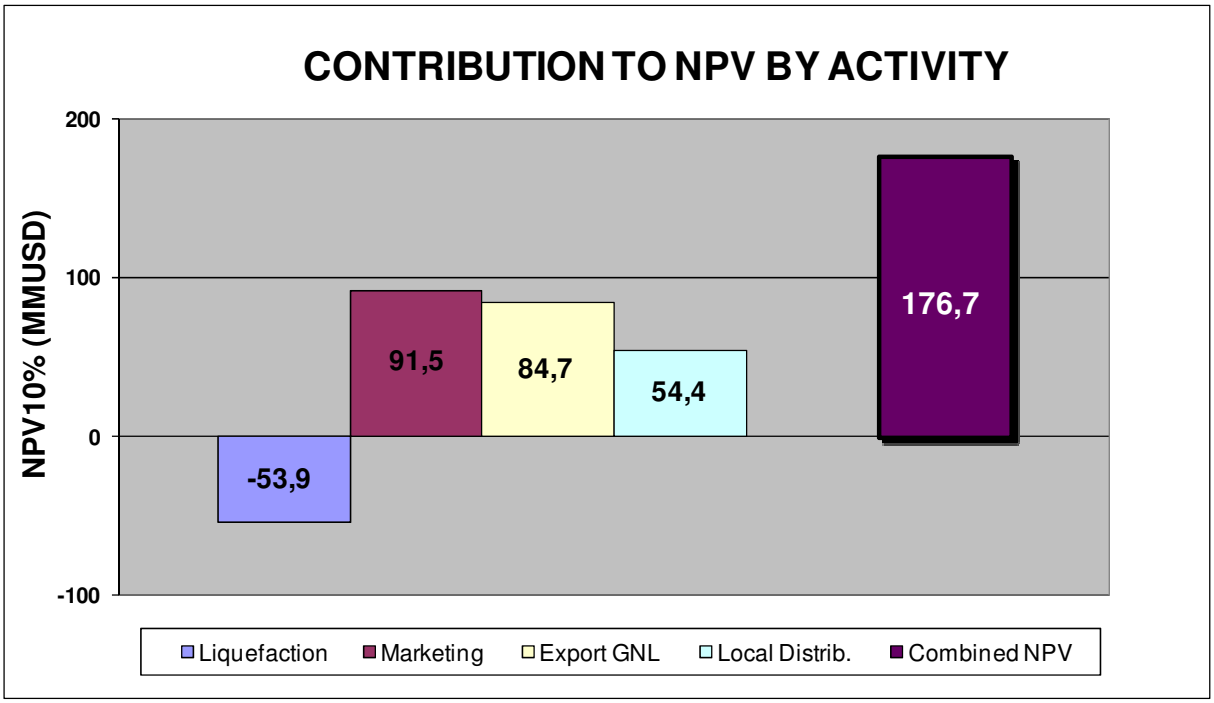

Some initial conclusions can be drafted:

- The combined result of the base case is positive, with only a negative NPV10% in the Liquefaction activity. However, the liquefaction presents an IRR of 9.4%, which is consistent with the relative low risk of the tolling scheme that operates.

  Note: as stated above the balance between the different activities can be adjusted by modifying the values of the liquefaction fee and the LNG FOB sale prices.

7.2 Sensitivity Analysis

To complete the previous results, a sensitivity analysis of the main parameters (Liquefaction plant CAPEX, Feed Gas Price, LNG DES Price and Brent level) is developed now.

7.2.1. Sensitivity to the Liquefaction Plant CAPEX

The Liquefaction plant CAPEX is estimated in section 6.1.1. with a precision level that recommends a sensitivity analysis in this item.

The following graph displays the variation of the Combined NPV (10% discount rate) to different CAPEX deviation cases:

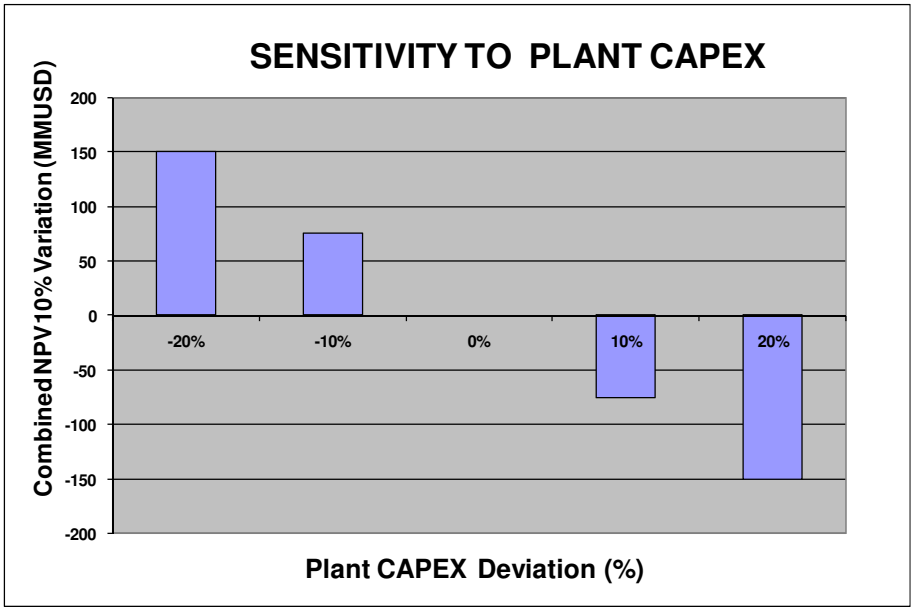

A CAPEX deviation of **20%** represents a modification in the Combined NPV of around **150 MMUSD**.

7.2.2. Sensitivity to the Feed Gas Price

In the base case, the feed gas price is 2% Brent. The Combined NPV sensitivity to this parameter is as following:

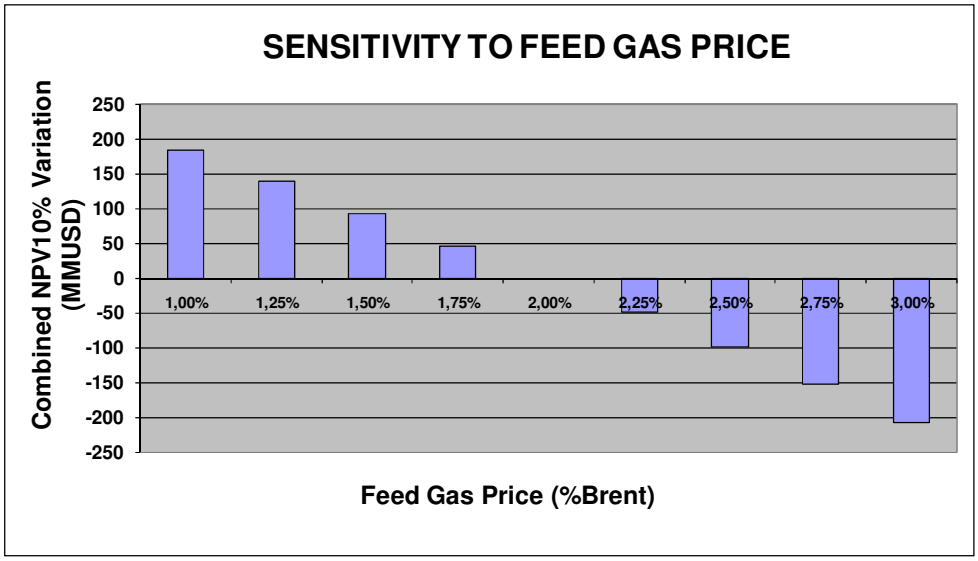

A reduction in the Feed Gas Price from the original 2% to **1.25%** would mean an increase in the Combined NPV of approximately **100 MMUSD.** The Feed Gas Price is directly related (among others) to the gas field development and production costs.

7.2.3. Sensitivity to the LNG DES Price (Export)

The LNG DES Price (in the export market) is 11% Brent in the base case. The Combined NPV sensitivity to the LNG DES Price is as following:

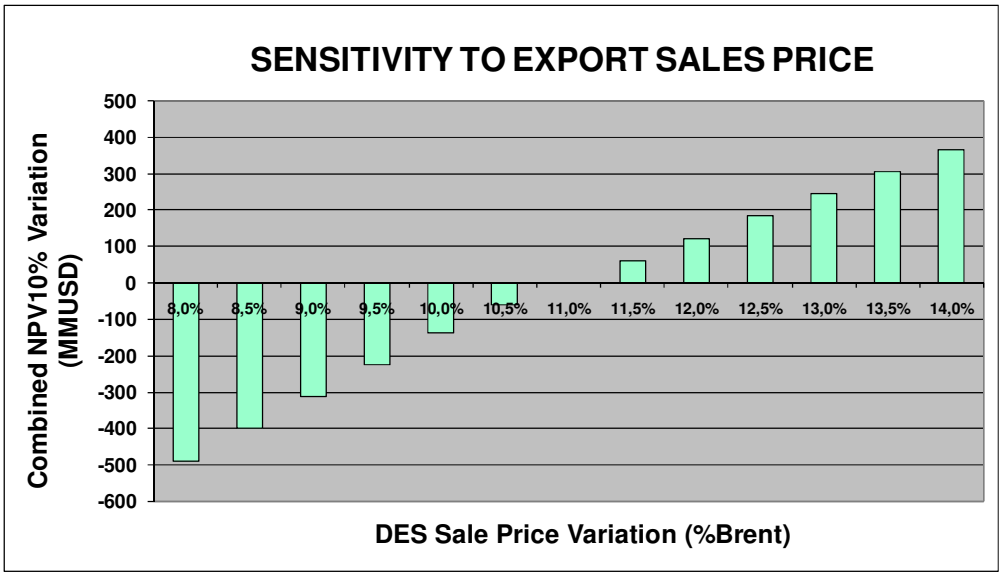

An increase in the LNG DES Price from the original 11% to **12% Brent** would mean an increase in the Combined NPV of approximately **120 MMUSD.**

7.2.4. Sensitivity to Brent

Considering different fixed Brent level scenarios, the Combined NPV sensitivity is as follows:

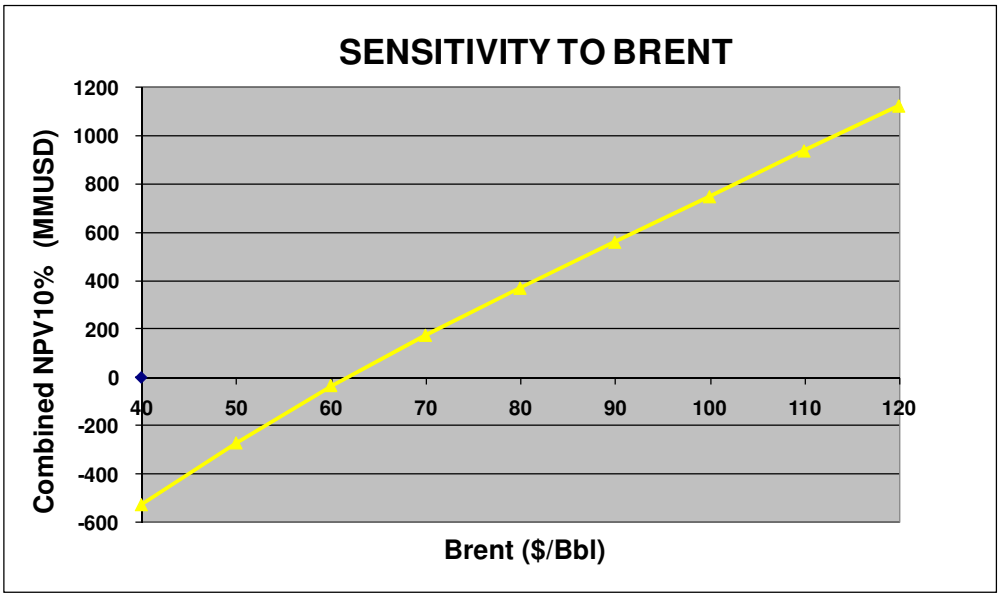

The Combined NPV10% presents positive values over Brent levels of **62 USD/bbl.**

The Impact of high Brent levels is significant, reaching NPV10% of above 700 MMUSD al a 100 USD/Bbl Brent.

7.3 Minimum Plant Size

As an extension to this analysis, it is interesting to reflect the plant production size in respect to different Brent level.

In the analysed base case, the positive Combined NPV started at 62 USD/Bbl Brent. Previous studies for a 0.5 mtpa plant had a threshold of 120 USD/Bbl. Reference plants in the industry with a 4 mtpa train were developed at levels of 40 USD/Bbl. The following chart represents these cases.

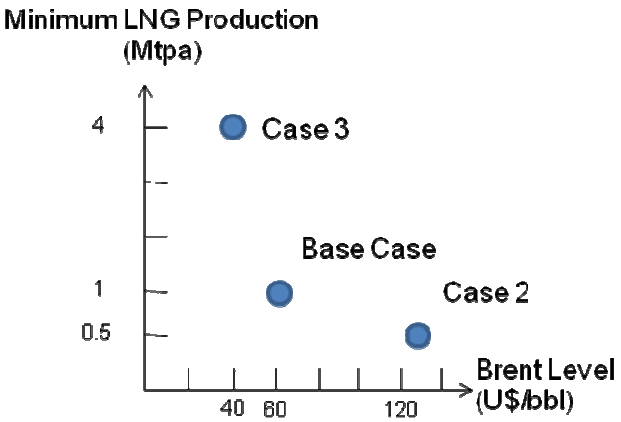

8. PLANNING

8.1 Development Strategy

The key aspects to consider in a further potential development of this paper business model are the following:

- The model is based on
  - **Access to gas** production
  - **Sustainable Project model** for exporting and local development
  - **Technology, project and business model that guaranties profitability**

- The need of a **tight coordination** between feed gas exploration/production actions (related to upstream activities, example: screening of countries /reservoirs/fields) and the LNG Project development itself (midstream) recommends a **combined team** that could work in parallel to reduce the duration of the project.

- The **local distribution** concept leverages domestic development. Its **direct and indirect influence** is a critical factor to access gas reserves and to facilitate the Project approval by the local authorities. Local marketing actions**, support for training and development** (e.g. construction and building of a technical school, etc.) and related activities are significantly more relevant than its economic cost.

- It is possible to assert that **access to technology is not a critical point**, due to the existence of several providers with mature and efficient solutions. This conclusion indicates that strategic alliances with technology or equipment providers would not be required. Nevertheless, **economics results** (or project economic feasibility) are strongly conditioned by technology selection and performance.

- An **early** relationship and **privileged** association with the respective NOC is a competitive difference in respect to other international competitors.

- A **joint venture** approach is convenient to mitigate risks and eventual parallel projects.

8.2 Required Framework

There are some relevant macroeconomics and regulatory aspects that make a producing country suitable for this business model.

The primary requirement is **gas availability**, that is, sufficient proved and available gas reserves to support the project, according with the scale and dimensions described in this proof of concept. As important and necessary as gas production, are the macroeconomic and regulatory aspects that should facilitate company creation and investment settlement in the host county. In this area, following issues should be considered:

1. Political and macroeconomic framework

   - Existence of a reasonable **stable politic and macroeconomic situation**, on a national development stage that could promote the creation of new energy sources for the country.
   - **Politic and legal stability** to guarantee the security of private long term investments.

2. Investments / Hydrocarbons Commercialization

   - **Favourable foreign investment and de-investment policies (**to facilitate the initiation and ending of private international investment and projects).

- Favourable laws and normative for the **importation and installation of turn key industrial components.** This facilitates the importation of components (modular or stand alone) of the liquefaction plant.
- Regulation for **hydrocarbon production and** processing activities already in place.
- Regulation for **hydrocarbon commercialization and exportation**.
- Defined and predictable tax regulation.
- Sufficient legal framework and roadmaps for the **definition and approval** of new activities in the country (for example: regulation for liquefaction plant tolling scheme).
- **Bilateral agreements** to promote foreign investments, avoiding double national taxes, and providing juridical and legal security to international investors.
- **Multilateral promotion frameworks** (IMF, World Bank, etc.)
- Favourable framework for **dividends repatriation.**
- National policies oriented to progressive reductions of importation and custom duties.

3. Transport and storage infrastructure

- Availability of **ports**, locations and road network for the project development.
- **Regulation (or roadmap for definition of new regulation**) for transportation and storage of liquefied natural gas (LNG) for domestic market and exportation.
- Regulation / feasibility of domestic **hydrocarbon** transportation.
- Domestic policies and normative for the storage and distribution of hydrocarbons.

4. Contractual and statutory models

- Authorization and legal dispositions for the creation of joint-ventures with **local companies.**
- Jurisprudence and acceptance of international legal framework as reference (USA o UK) to guarantee new companies juridical security (including arbitrage rules).
- Already in place purchase/sale hydrocarbons legal schemes.

5. Local distribution market

- Natural gas distribution defined as **public service**.
- Minimum and **simple role scheme**: possibility of companies for purchase and distribution of natural gas.
- Existing private companies that could act as gas wholesale marketers.
- **Framework for the definition** of a natural gas tariff scheme (or other fuels antecedents).

6. Large scale energy projects planning

- National policies for the **promotion** of activities / investments to support the energy development.
- Identification of the country growing vectors (industry, other potential sectors, etc).

7. Expansions

- Favourable policies for future project's expansions.

8. Divestments

- Favourable policies for divestment or investment ownership transfer.
- Favourable framework **for capital funds repatriation.**

8.3 Risk Analysis

As a part of the study an initial risk analysis is included, grouped in the following categories**:**

- Project management.
- Country risk.
- Reserves.
- Business.
- Commercial.
- Engineering and Construction.
- Transportation.

The following potential risks have been considered:

1. Cost estimation uncertainty
2. Lack of definition of design data or potential change
3. Inaccuracy in the evaluation of gas reserves
4. Legal and investment instability
5. Appropriation of the project concept by the NOC or local partner
6. Loss of business opportunity due to a competitor move
7. Inaccuracy in the definition of the basic design data
8. Lack of track record in some of the proposed technologies
9. Changes in the energy regulation
10. Host country political stability
11. Reduction in available LNG for export due to local policies
12. Uncertainty in the availability of infrastructure and services in the host country during the plant construction
13. Lack of experience in the host country of international contractors
14. Difficulty in feed gas contracting
15. Technical information available not binding
16. Lack of coordination among different parts of the project (upstream, liquefaction, local distribution)
17. Inefficiency in the logistic chain
18. Difference between the costs estimation from the exponential methodology and the one estimated by the technologists
19. Uncertainty in the duration of the construction phase
20. Uncertainty in the availability of local contractors and skilled manpower
21. Lack of information of weather, geological and maritime conditions affecting the basis of design
22. Uncertainty in the LNG sale pricing level in the export markets
23. Potential new gas reserves
24. Limitation in the number of evaluated technologies
25. Uncertainty about the evolution of local natural gas demand

Each risk element has been evaluated in the following aspectsf:

- Probability of occurrence
  - 5: Certain (90-100%)
  - 4: Probable (75-90%)
  - 3: Possible (25-75%)
  - 2: Improbable (10-25%)
  - 1:Rare (0-10%)

- Impact in the project in terms of cost
  - 5: Critical
  - 4: Important
  - 3: Medium
  - 2: Low
  - 1: Insignificant
- Mitigation capacity
  - High
  - Medium
  - Low

According to the risk review, the following risk representation is developed:

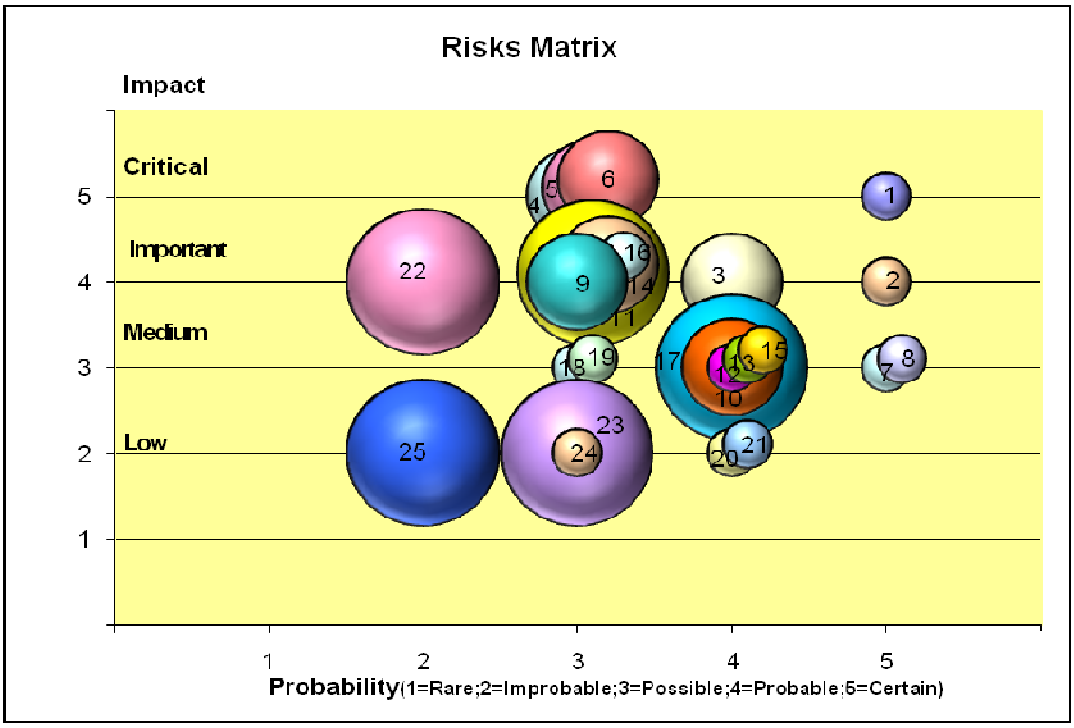

Note: larger spheres diameter represents less mitigation capacity

9. CONCLUSIONS

A small scale LNG approach can bring about new strategies of exploitation and commercialization of natural gas, facilitating the development of a local market in places where there are not sufficient reserves for a large scale project, and local demand does not justify its exploitation alone.

There is a wide offer of proven available technologies for small-medium scale liquefaction development. The selection of a particular technology will depend on the specific business case.

A dual purpose business model (20% local market and 80% export market) could support conveniently financial aspects of the project and national development needs.

The application of the concept proposed in this paper on a real case requires an ad-hoc feasibility study to define the design and the estimations with specific technical information (composition of gas, location, maritime aspects, etc.) as well as local market characteristics (demand, regulation, etc.).

According to the economic results, the base case (1 mtpa; 70 USD/Bbl Brent) could offer a combined NPV of 176.7 MMUSD and an IRR of 9.4% in the liquefaction plant. The economic result is significantly affected by the Brent price level.